NOAH

Safety - no way but NOAH's way

SAFETY - no way but NOAH's way

OUR MISSION

To Continue to be the leader

Continual improvement, and a constant search for better standards.

To Give our customers only the best

With integrity, honest and effective capability, we continue to be the forefront of the safety industry in delivery, specifications, reliability and value for money.

To maintain our high standards

To constantly ensure our quality systems are well above the internationally accepted standards.

Noah is a leading Singapore company specialising in quality life-saving, fire fighting, marine equipment and industrial safety equipment since 1986. A company that has gained a world-wide reputation for quality and excellence in service and products from the world's leading manufacturers.

We believe that our exacting high standards are the only acceptable option when it comes to safety. Awards like our ISO 9001 Certification for Quality Management, is just part of our total commitment to make safety 100% safe and 100% reliable.

CERT NO.: 93-2-0202
ISO 9001 : 2000

All our staff have received specialised formal training on all the products conducted by the respective manufacturers. They are not only the experts in product maintenance and care, they have in-depth knowledge of the uses, advantages and specifications of all the products. They are constantly upgrading themselves in terms of skills and knowledge to keep them totally informed and focused on all the new developments in the industry.

When customers need us, there will be no delays. NOAH is structured to attend to all your needs around the clock, throughout the year. We have a service team backed up by a fully equipped service station, who would be there in an instant, if you should require any inspection, testing, repairs and equipment supply. As safety goes, there should never be any delays. If you prepare yourself with NOAH, you'll always be protected - **all the time**.

TRAINING / FIT TESTING

With technical knowledge and expertise, we provide training in proper handling and maintenance of all the safety equipment that we represent. Rest assured that our well-trained staff will help you with any query on the proper usage of the equipment.

DEDICATED STAFF

To all the staff of NOAH, safety is in their blood. It's more than a job - **it's a lifetime passion**.

SERVICING

We have a fully equipped service station working around the clock, ready for inspection, repair or testing of your equipment, 24 hours a day, 365 days a year. Feel safe that your equipment is operational when you need them most.

INVENTORY / SPARE PARTS

A ready access to stock and spares, monitored closely and replenished regularly. This enables your company to practice Just In Time (JIT) supply and quick replacement of spare parts. Our infrastructure eliminates equipment down-time and lowers your stocking costs.

Our Factory

Our Office

NOAH

Safety - no way but NOAH's way

TABLE OF CONTENTS

ALARMS & SIRENS
PAGE 98

BINOCULARS
PAGE 99

BOATS
PAGE 14

BUOYS / LIFEBUOYS
PAGE 18

CABINETS & CONTAINERS
PAGE 158

CLEARVIEW SCREENS
PAGE 100

CLOTHING - CHEMICAL
PAGE 244

CLOTHING - FIRE
PAGE 160

COMPASSES
PAGE 102

DAVIT SYSTEMS
PAGE 106

EXTINGUISHERS & ACCESSORIES
PAGE 172

EYE WASH / SHOWER STATION
PAGE 250

FALL PROTECTION
PAGE 262

FIRE DETECTION CONTROL SYSTEMS
PAGE 180

FIRE FIGHTING EQUIPMENT
PAGE 182

GAS DETECTOR & ACCESSORIES
PAGE 268

GLOBAL MARITIME DISTRESS SAFETY SIGNAL
PAGE 20

HORNS & NAVIGATIONAL LIGHTS
PAGE 108

HOSE, COUPLING, NOZZLES
PAGE 183

IMMERSION SUITS
PAGE 26

LIFEJACKET, INHERENT(FOAM) & ACCESSORIES
PAGE 30

LIFEJACKET, INFLATABLE & ACCESSORIES
PAGE 34

LIGHT FOR LIFEBUOY
PAGE 42

LIGHT, PFD PERSONAL
PAGE 44

LIGHT, PORTABLE HANDHELD

PAGE 50

LIFERAFT/LIFEBOAT ACCESSORIES

PAGE 56

LIFERAFT & ACCESSORIES

PAGE 82

LIFESAVING EQUIPMENT

PAGE 58

LIGHT, SEARCHLIGHT

PAGE 66

MARINE OBM

PAGE 72

PERSONAL PROTECTION - EYE

PAGE 202

PERSONAL PROTECTION - FOOT

PAGE 214

PERSONAL PROTECTION - HAND

PAGE 215

PERSONAL PROTECTION - HEAD

PAGE 220

PERSONAL PROTECTION - EAR

PAGE 221

PYROTECHNICS (DISTRESS SIGNALS)

PAGE 74

RESCUE EQUIPMENT
PAGE 192

RESPIRATORY - AIR
PAGE 185

RESPIRATORY - FILTERING
PAGE 227

SAFETY POSTERS
PAGE 88

SAFETY TAPES
PAGE 92

SEATS, HELMSMANN
PAGE 134

SERVICING/TESTING/ INSPECTION
PAGE 300

SIGNAGES/ STICKERS, IMO
PAGE 90

SORBENT
PAGE 280

VENTILATORS
PAGE 284

WHEELHOUSE/BRIDGE ACCESSORIES
PAGE 140

WIPERS, MARINE
PAGE 144

FUJIKURA COMPOSITES

For 100 years since its establishment in 1901, Fujikura has been putting put a great variety of products including rubberrized waterproof fabrics, rubber-coatd fabric products, industrial supplies, insulatin gmaterials and sporting goods.

Fujikura's rubber-ciated fabrics, are prarticularly noted for their outstanding quality and reliability, thanks to unrivaled technology gained through presistent research and a wealth of experience. And, as everyone agrees, rubber-coated fabric is essential material for inflatable life rafts, life jackets, chutes, rescue boats and other lifesaving appliances. It builds reliability and quality into lifesaving equipment. Today, Fujikura's lifesaving appliances, designated as "TYPE APPROVAL BY J.M.O.T", enjoy a worldwide reputation for their peeriess reliability.

FUJIKURA INFLATABLE LIFE RAFT

FRN-SN型

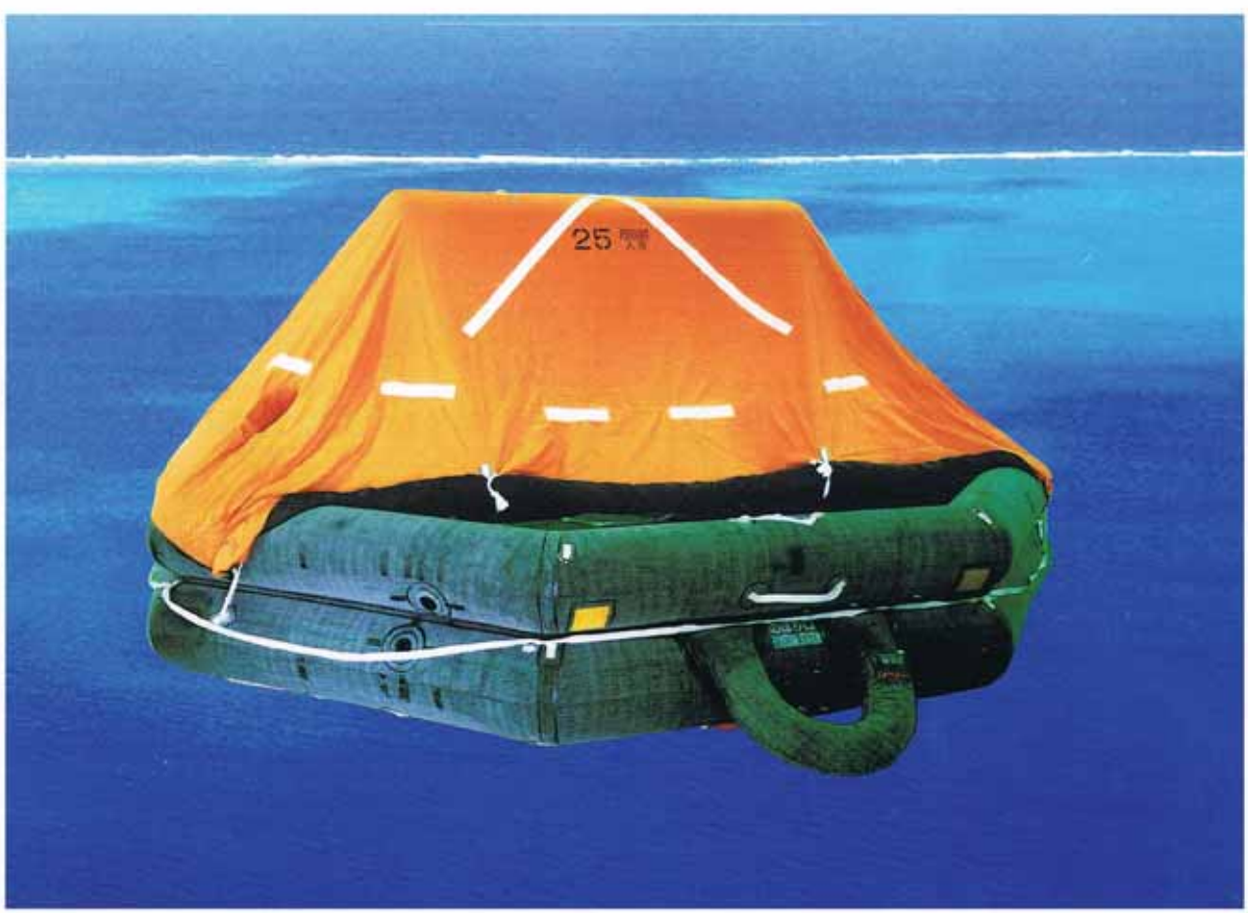

藤倉ゴム工業株式会社

FUJIKURA RUBBER LTD.

THE HAMMAR H20 – WORLD MARKET LEADER FOR SOME VERY STRONG REASONS

The Hammar H20 hydrostatic release unit has a weak link.

But it is not a mistake. It is designed this way, to allow the liferaft to inflate and to release it from the sinking ship. The H20 fits liferafts of all shapes and sizes. It won't rust. It needs no annual service, maintenance or spare parts. You simply install a new one every second year. The H20 has earned more world-wide approvals than any other unit. So if you feel strongly about safety and reliability, insist on the Hammar H20 – the release unit with only one weak link.

Learn more about Hammar H20 at www.cmhammar.com

BETTER SOLUTIONS FOR SAFETY AT SEA

HAMMAR®

HAMMAR REMOTE RELEASE SYSTEMS – GOOD SOLUTIONS FOR BAD CONDITIONS

Sometimes things just do not turn out the way you planned.

With Hammar Remote Release Systems, you can save lives quickly and efficiently by releasing liferafts from the bridge or other strategic locations. Besides saving lives, the systems also represent a sound economic investment. Valuable deck space can be freed by placing liferafts in remote locations on board and crew costs are kept at a minimum since the systems are easy to use. So whether you are a ship owner, designer, builder or onboard safety officer, Hammar Remote Release Systems offer flexible solutions with many decisive advantages – for both safety and economy.

Learn more about Hammar Remote Release Systems at www.cmhammar.com

BETTER SOLUTIONS FOR SAFETY AT SEA

HAMMAR®

MARINE SAFETY

MARINE SAFETY

Noah offers the WIDEST range of Marine Safety Equipment available in Singapore.

As our commitment to our Principals is for the Asean region, we maintain a healthy stock at all times for your convenience.

Our variety of sources enables us to offer different price level to suit your budget.

Our Trained sales personnel advise on your needs to optimize your purchases and eliminate unwarranted purchases in accordance to the latest SOLAS (Safety of Life at Sea) requirements.

Talk to us, when your need is for different Approvals (USCG, MED, etc), different types of vessels (Ro-ro, Rigs, Accomodation Platform, etc)

CONTENTS

PRODUCT CODE	PRODUCTS	PAGE
BOAT	**BOATS** A) SEMI-RIGID B) INFLATABLE	14
BUOY	**LIFEBUOYS**	18
CLCH	**CLOTHING CHEMICAL** REFER TO INDUSTRIAL SAFETY	248
CLFF	**CLOTHING FIRE FIGHTING** REFER TO FIRE FIGHTING EQUIPMENT	160
EXTG	**EXTINGUISHERS & ACCESSORIES** REFER TO FIRE FIGHTING EQUIPMENT	172
FDCS	**FIRE DETECTION CONTROL SYSTEMS** REFER TO FIRE FIGHTING EQUIPMENT	180
GMDS	**GLOBAL MARITIME DISTRESS SAFETY SIGNAL (GMDSS)** A) EPIRB (Emergency Position Indicating Radio Beacons) B) SART (SEARCH AND RESCUE TRANSPONDER) C) SURVIVAL RADIO D) HYDROSTATIC RELEASE FOR EPIRB	20
HORN	**HORN/SIREN, AIR/ELECTRIC & ACCESSORIES** REFER TO NAVIGATIONAL AIDS & WHEELHOUSE ACCESSORIES	108
IMMS	**IMMERSION SUITS**	26
JINB	**LIFEJACKET, INHERENT (FOAM)**	30
JINF	**LIFEJACKET, INFLTABLE & ACCESSORIES**	34
LBOY	**LIGHT FOR LIFEBUOY**	42
LPER	**LIGHT, PFD PERSONAL & LIFEJACKET WHISTLE**	44
LPHL	**LIGHT, PORTABLE HANDHELD**	50
LRAC	**LIFERAFT ACCESSORIES**	56
LSEQ	**LIFESAVING EQUIPMENT** A) PERSONAL RECOVERY DEVICE B) STRETCHERS	58
LSLT	**LIGHT, SEARCHLIGHT**	66
MOBM	**MARINE OUTBOARD MOTOR**	72
PYRO	**PYROTECHNICS (DISTRESS SIGNALS)**	74
RAFT	**LIFERAFT & ACCESSORIES**	82
SPOS	**SAFETY POSTERS**	88
SSTK	**SIGNAGES/STICKERS, IMO**	90
STAP	**SAFETY TAPES**	92

BOATS

SEMI-RIGID BOAT

NARWHAL SEMI-RIGID BOAT

UNSINKABLE RESCUE BOATS SOLAS-CE APPROVED

Unsinkable Narwhal rescue boats comply with SOLAS 1974 and all its ulterior amendments as well the Directive 96/98/CE on Marine Equipment (MEd). SOLAS-CE approved Narwhal rescue boats can be fitted in all vessels with Community flag and in any country where SOLAS rules were accepted. Each boat is supplied with its corresponding Conformity Declaration, with its identification plate and with the maintenance and use manuals. The production of all NARWHAL boats, including the rescue boats, is endorsed by the System of Quality ISO ISO 9001:2000 Nº2388-2005-AQ-BAR-ENAC. Guarantee based on the experience, since the first boat's homologation in 1988, thousands of units have been produced with fully satisfaction for our clients. The demanding test the rescue boats have been submitted in order to achieve their approval, guarantee that the boats will overcome the hardest conditions and the most extreme climates. Due to their manoeuvrability and their quick final preparation, their main task is to recover fallen overboard crew members from the sea. They can be used as well to group and to organise the liferafts.

STOCK CODE	BRIEF DESCRIPTION
BOAT-NAR-SR42C	NARWHAL, SV420 Semi-Rigid Inflatable Fiberglass Hull Rescue Boat, Capacity: 6men, EC approved to SOLAS by DNV, c/w: - Standard SOLAS accessories Motorization: 25HP maximum
BOAT-NAR-SR48C	NARWHAL, SV480C Semi-Rigid Inflatable Fiberglass Hull Rescue Boat, Capacity: 6men, EC approved to SOLAS by DNV, c/w: - Standard SOLAS accessories Motorization: 40HP maximum
BOAT-NAR-SR48A-01	NARWHAL, 140 Jockey Console, Single Person, For SV480 and Single OBM control, c/w: - Mechanical Remote Steering System - 01pce Battery & Disconnect Switch

TECHNICAL FEATURES		
BOAT MODEL	SV420	SV480
LENGTH OVERALL	420CM	480CM
LENGTH INSIDE	306CM	354CM
BEAM OVERALL	207CM	214CM
BEAM INSIDE	123CM	110CM
MAX DEPTH	100CM	100CM
MAX TUBE Ø	50CM	53CM
NO. OF INDEPENDENT COMPARTMENTS	5+1	5+1
MAX.AUTHORIZED MOTOR POWER	25 CV Ó 40 CV	40CV
MOTOR SHAFT TYPE	L	L
MAX.AUTHORIZED NO. OF PERSONS	6	6
MAX. AUTHORIZED PAY LOAD	685KG	635KG
APPROX. WEIGHT OF BOAT	200KG	250KG

For more information or order,
please contact our Sales Team at
Tel: **(65) 6266-0788** or E-mail: **sales@noah.com.sg**

STANDARD EQUIPMENT

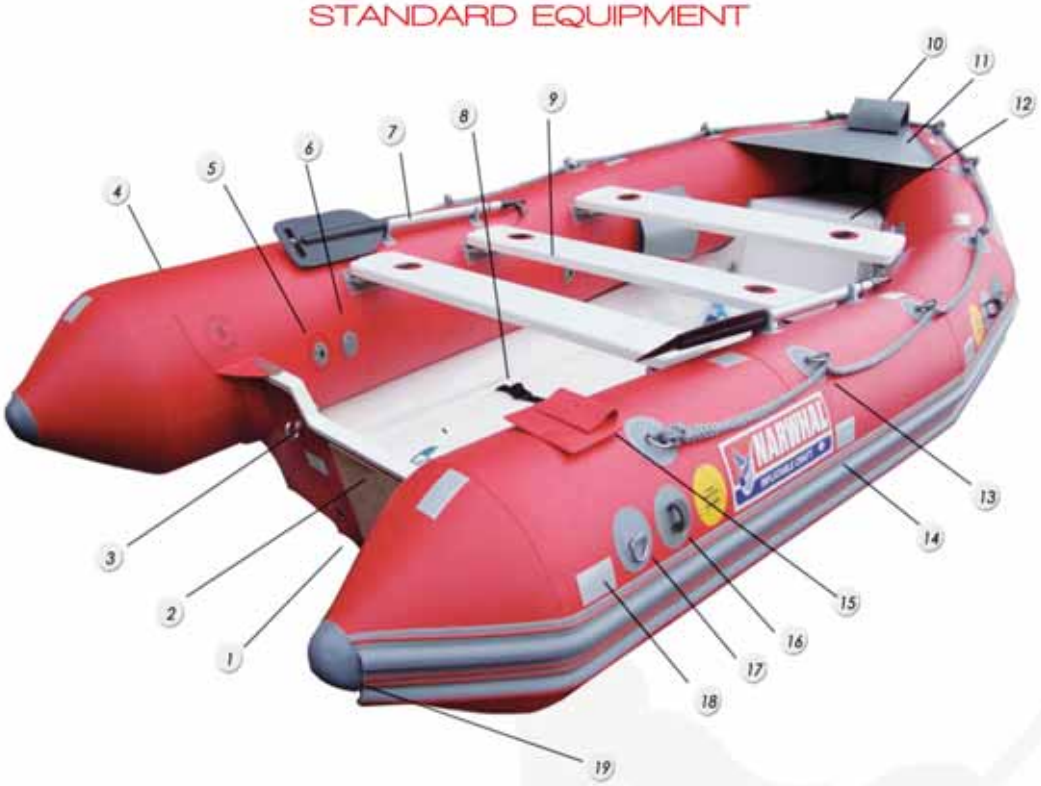

1. GRP unsinkable hull
2. Wooden out/aluminium in transom reinformcement plates
3. Mooring/towing & lifting rings
4. Tube in TRITEX with 5 independent chambers
5. Automatic relief valves
6. Reinforced infiltaion/deflation valves
7. Aluminium boat hook-paddle
8. Retainers for fuel tank
9. Folding fisherman benches
10. Pocket for line
11. Bowdodger
12. Bow locker for equipment
13. "D" rings with rope
14. Reinforced wide rubbing strake fender
15. Pocket for position light
16. Fastening for rightening rope
17. "D" ring for rightening rope
18. Reflective labels
19. Reinforced stern cones

ALUMINIUM BOAT HOOK-PADDLE

BOW LOCKER FOR SV-480

BOW LOCKER FOR SV-420

LIFTING RINGS

BOWDODGER & MOORING LINE GUIDE

FOLDING FISHERMAN BENCHES

SV420

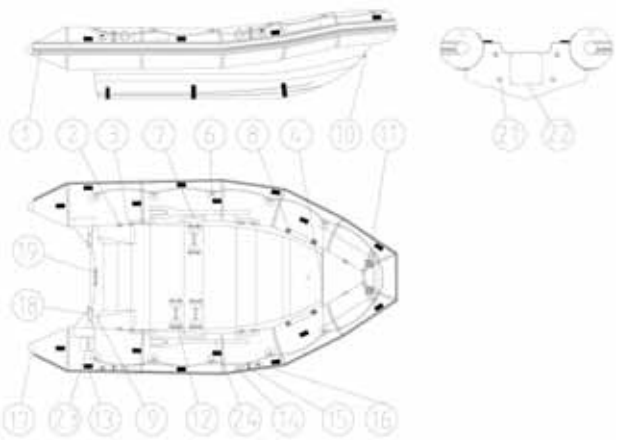

SV480

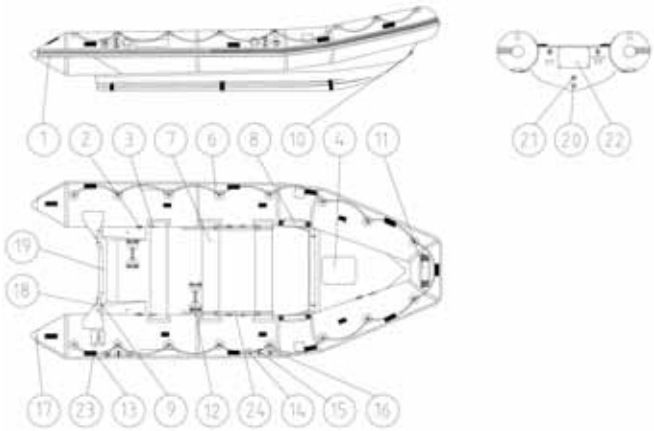

EQUIPMENT STANDARD			
1	RAINDROP BANDA PERIMETER PROTECTION 2	13	REFLECTIVE TAPE.
2	PRESSURE VALVES.	14	RIGHTING LABELS.
3	REINFORCED INFLATION-DEFLATION VALVES	15	RIGHTING LINE HOLDER
4	EQUIPMENT LOCKER	16	RIGHTING LINE RING
5	RING WITH LINE.	17	REINFORCED STERN CONES.
6	COLLAPSIBLE BENCH	18	TOWING RINGS
7	JEUX DE FIXATIONS SAISINES DE BOUÉES DE SAUVETAGE / FLOAT QUOIT LINE HOLDER SET.	19	ALUMINIUM IN-TRANSOM REINFORCED PLATE.
8	FLOAT QUOIT LINE HOLDER SET.	20	HULL DRAINING VALVE.
9	LIFTING RINGS.	21	DECK DRAINING VALVE
10	MOORING-TOWING RINGS.	22	WOODEN OUT-TRANSOM REINFORCED PLATE.
11	LINE HOLDER	23	FITTING FOR POSITION LIGHT.
12	RETAINERS FOR FUEL TANK.	24	FOOTPUMP-BELLOWS. REPAIR KIT.

NOAH

For more information or order,
please contact our Sales Team at
Tel: **(65) 6266-0788** or E-mail: **sales@noah.com.sg**

RESCUE BOAT HOOK

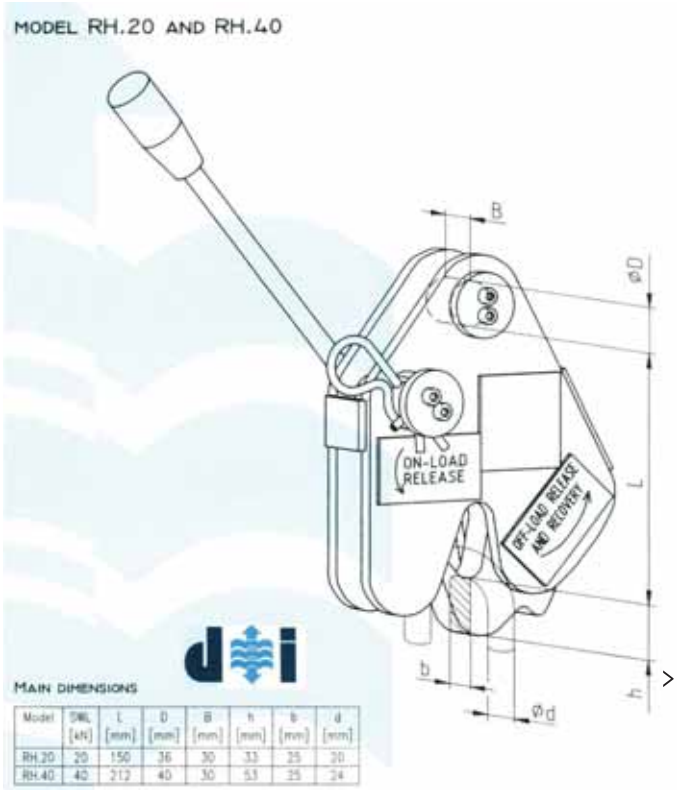

Model	SWL [kN]	L [mm]	D [mm]	B [mm]	h [mm]	b [mm]	d [mm]
RH.20	20	150	36	30	33	25	20
RH.40	40	212	40	30	53	25	24

STOCK CODE	BRIEF DESCRIPTION
BOAT-DVT-XHKR	DAVIT, AUTOMATIC RELEASE HOOK RH-20

INFLATABLE BOAT

LALIZAS

LALIZAS INFLATABLE BOAT

Inflatable Boats for 3 men „Hercules 240“
c/w Two oars, bellows pump, repair kit and a floor board bag plus instruction manual

Inflatable boats are very useful as tenders to the main boat and can be valuable when approaching water too shallow for the main boat LALIZAS “Hercules” boats are ideal as tenders and when fitted with an outboard motor you can even go on short trips and explore the surrounding area. They are available in four sizes 185cm, 220cms, 240cms and 270cms. Additionally, they come in three floor variations, slatted, continuous foldable wooden or the latest technology, inflatable floor, so you can choose the one that suits you . Floors can also be purchased separately, this allows grater choice to suit your needs. Depending on the model, “Hercules” boats have an inflatable keel, ideal for better lift and steering, when using the motor.

STOCK CODE	BRIEF DESCRIPTION
BOAT-LLZ-I24	LALIZAS, 50920, HERCULES 240, INFLATABLE BOATS FOR 3 MEN C/W: 3 WOODEN SLATS, TWO OARS, A BELLOW PUMP, REPAIR KIT AND A FLOOR BOARD BAG PLUS INSTRUCTION MANUAL. MAX POWER 4.9HP AND MAX LOAD 310KG.

LIFEBUOYS

COSALT LIFEBUOYS

Perrybuoys with retro-reflective tape are manufactured in rigid high density polythene for lightness.

Colour: International orange, Dimension: 30“

STOCK CODE	BRIEF DESCRIPTION
BUOY-COS-LB2.5	"COSALT" PERRY 2.5KG LIFEBUOY, C/W REFLECTIVE TAPE APPROVAL: EC-MED APPROVED TO SOLAS BY LLYODS
BUOY-COS-LB4.0	"COSALT" PERRY 4.0KG LIFEBUOY, C/W REFLECTIVE TAPE APPROVAL: EC-MED APPROVED TO SOLAS BY LLYODS
BUOY-COS-LINE	"COSALT" PERRY ENCAPSULATED SAFETY LINE 30M LENGTH

DATREX LIFEBUOYS

Detrex buoys are molded from high impact linear low-density polyethylene for superior life expectancy in the most harsh environmental extremes. The Retro Reflective tape used is “High Tack“. The rope is of a high quality polypropylene with UV stabilizer. The brackets are made of marine grade aluminum. Colour: Orange, Dimension: 30“

STOCK CODE	BRIEF DESCRIPTION
BUOY-DTX-LB2.5	"DATREX" DECKBUOY, 2.5KG, C/W REFLECTIVE TAPE APPROVAL: EC-MED & USCG APPROVED
BUOY-DTX-LB4.0	"DATREX" BRIDGEBUOY, 4.0KG, C/W REFLECTIVE TAPE APPROVAL: EC-MED & USCG APPROVED

For more information or order,
please contact our Sales Team at
Tel: **(65) 6266-0788** or E-mail: **sales@noah.com.sg**

EVAL LIFEBUOYS

Lifebuoy Solas 74, L.S.A Code, 96/98/EC

EVAL lifebuoy with retro-reflective tapes are made of polyethylene and filled with polyurethane foam.
Colour: Orange, Dimensions: ID 43.60cm, OD 75cm. For commercial ships or big boats.

STOCK CODE	BRIEF DESCRIPTION
BUOY-EVA-LB2.5	"EVAL" LIFEBUOY 2.5 KG, PN 559, C/W: REFLECTIVE TAPE APPROVAL: EC-MED APPROVED TO SOLAS BY LLOYDS
BUOY-EVA-LB4.0	"EVAL" LIFEBUOY 4.0 KG, PN 558, C/W: REFLECTIVE TAPE APPROVAL: EC-MED APPROVED TO SOLAS BY LLOYDS

ZHENGXING LIFEBUOYS

STOCK CODE	BRIEF DESCRIPTION
BUOY-JGH-2.5KG	"ZHENGXING" LIFEBUOY, 2.5KG C/W: REFLECTIVE TAPE APPROVAL: CCS APPROVED TO SOLAS
BUOY-ZXN-4.5KG	"ZHENGXING" LIFEBUOY, 4.3KG C/W: REFLECTIVE TAPE APPROVAL: CCS APPROVED TO SOLAS

GLOBAL MARITIME DISTRESS SAFETY SIGNAL

ACR SATELLITE$_2$ 406™ EPIRB

Automatic Category I 406 MHz EPIRB with Sea Shelter$_2$™ Bracket (Model No. RLB-32 Cat I)

- Product includes all features from Category II model above, plus fully enclosed, high density, UV stabilized polyethylene bracket with hydrostatic release
- Patent pending rod system allows release of the beacon from a Category I bracket when submerged in water between 1.5 –4 m (4.9 – 13.1 ft)

STOCK CODE	BRIEF DESCRIPTION
GMDS-ACR-RLB32	ACR, 2774 EPIRB, SATELLITE 406 WITH HOUSING
GMDS-ACR-RLB32-02	ACR, 9368 ANTENNA

ACR SATELLITE$_3$ 406 EPRIB

The SATELLITE$_3$ 406™ EPIRB has quietly built a reputation in the commercial fishing industry. This workhorse utilizes a proprietaty electronics package for faster, more stable 406 MHz transmissions to low-earth orbiting LEOSAR satellites. In an emergency, your registered, digitally-coded distress message is broadcast via a powerful 6-watt, 406 MHz signal (typically within 1 hour). An integrated 121.5 MHz homing signal then guides local Search and Rescue (SAR) efforts.

Upgrade to GPS postioning with the optional GPS interface cable (sold separately). This connects the SATELLITE3 to your vessel's GPS receiver to continuously update and store precise position data. GPS postitioning narrows the search radius from 2.3 nm down to 0.5 nm (110dys) and provides SAR notification typically in 2-15 minutes.

• Automatic Category I Sea Shelter$_3$ bracket is fully enclosed and is made of high density, UV-stabilized polyythylene for years of extreme abuse; the patented rod system releases the beacon when submerged in water between 4.9 and 13.1 ft (1.5 - 4 m)

STOCK CODE	BRIEF DESCRIPTION
GMDS-ACR-RLB38	ACR, 2874, SATELLITE3 406 EPIRB, CAT. I

For more information or order,
please contact our Sales Team at
Tel: **(65) 6266-0788** or E-mail: **sales@noah.com.sg**

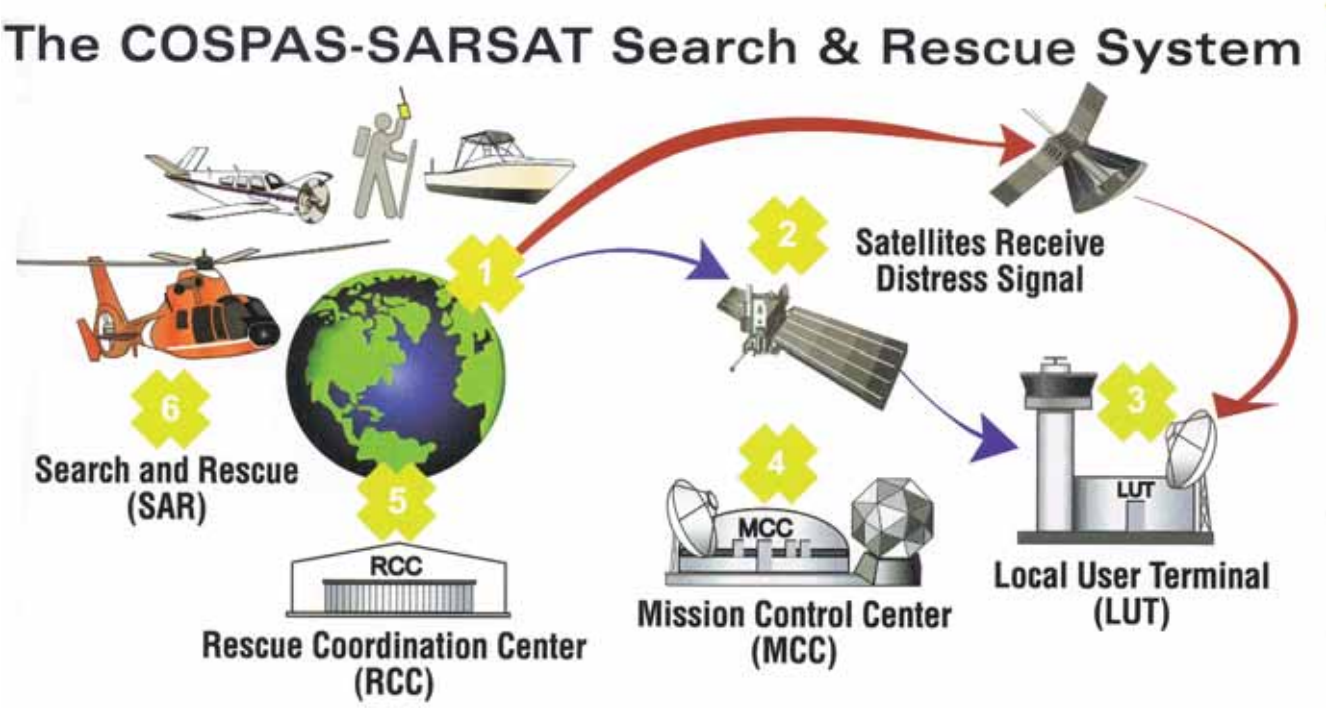

ACR HydroFix™

Hydrostatic Release Unit for Category I Bracket

- Patent pending rod system allows release of the beacon from a Category I bracket when submerged in water between 1.5 – 4 m (4.9 – 13.1 ft)
- Universal kit is designed to work with ACR's Open Face™, Sea Shelter™, Sea Shelter$_2$™ and Sea Shelter$_3$™ brackets

Size: 2.5 W x 3.38 L x 2.0 H in (6.4 W x 8.6 L x 5.1 H cm) ; Weight: 3.3 oz (93.6 g)

STOCK CODE	BRIEF DESCRIPTION
GMDS-ACR-XEPRB-01	ACR, 9490 ACR HYDROFIX HRU-100 KIT (FOR SAT 2 406, RAPIDFIX, GLOBALFIX, SEASHELTER, 9435/9455)

HAMMAR®
BETTER SOLUTIONS FOR SAFETY AT SEA

HAMMAR H20E

The Hammar H20 is also used widely for Emergency Position Indicating Radio Beacons (EPIRB). 90% of the world's EPIRB manufacturers are using the Hammar H20 for the freefloat function. Should the vessel sink, the Hammar H20, which is activated by increasing water pressure, will automatically release the EPIRB. On reaching the surface the EPIRB starts to emit a signal of identification and position to a satellite. Instead of the rope sling a specially developed plastic bolt secures the radio beacon and will be cut when the unit is activated. Other methods of securing the beacon are also used, such as a rope or a strap.

STOCK CODE	BRIEF DESCRIPTION
GMDS-HMR-XH20E	HAMMER, H20E HYDROSTATIC RELEASE FOR EPIRB, USCG/EC
GMDS-HMR-XH20E-01	HAMMAR, PLASTIC BOLT, STANDARD FOR H20E EPIRB RELEASE
GMDS-HMR-XH20E-02	HAMMAR, STAINLESS STEEL NUT, M8, FOR H20E EPIRB RELEASE

AquaLink™ View 406 GPS PLB (PLB-350C)

GPS-Integrated Personal Locator Beacon with Digital Display

Featuring the same advanced technology and robust features as the AquaLink™ 406, the AquaLink™ View adds a reassuring element with its next-generation digital display.

Upon activation, the high-visibility screen displays a continuous stream of crucial data, including:

- Confirmation that the beacon is working
- Your exact GPS coordinates
- Remaining battery power
- Visual prompts for correct deployment

In self-test mode, the screen reports status of the 406 MHz signal, GPS acquisition and Battery power, and provides notification of required actions, such as “Send for Serivce”.

AquaLink™ 406 GPS PLB (PLB-350 B)

Buoyant GPS-Integrated Personal Locator Beacon with Strobe

With three levels of integrated signal technology – GPS positioning, a powerful 406MHz signal and 121.5MHz homing capability – the AquaLink quickly and accurately relays your position to a worldwide network of Search and Rescue satellites, reducing search time and increasing your chances of survival. This self-locating beacon eliminates the waiting time required for traditional LEOSAR satellites to fix your position to get help on the scene quickly. ACR’s professional grade 66-channel internal GPS engine allows for better cold-start performance.

Size: 2.25 x 5.88 x 1.49 in (5.72 x 14.9 x 3.78cm)
Weight: 9.2 oz (260g)
Deployment: Manual only
Typical Battery Life: 30 Hours @ -4°F (-20°C) Longer in higher ambient temperatures

STOCK CODE	BRIEF DESCRIPTION
GMDS-ACR-PL350-C	ACR AQUALINK VIEW 406, 2884, PLB350C, PERSONAL LOCATOR BEACON
GMDS-ACR-PL350-B	ACR AQUALINK 406, 2882, PLB350B, PERSONAL LOCATOR BEACON

NOAH

For more information or order,
please contact our Sales Team at
Tel: **(65) 6266-0788** or E-mail: **sales@noah.com.sg**

Self-Test SART

Within the recreational boating community, one of the least recognized pieces of safety gear is the Search and Rescue Transponder (SART). When activated, a SART transmits an emergency signal that imposes a 12-dash locator image on the radar screens of other vessels. SARTS are mandatory aboard commercial vessels that must conform with federal requirements, but they can also be of value aboard recreational boats and life rafts.

With any transmitting safety device, there is always the question: “Is it working?” ACR’s new Pathfinder SART helps eliminate the guesswork. Simply activate the “test mode” and check for a response on a nearby radar set.

— Dan Fales, Motor Boating

SEARCH AND RESCUE TRANSPONDER

ACR PathFinder™3 SART

Survival Craft Radar Transponder for Search and Rescue Operations

- Enhances radar returns with 12 intense blips, whereby the first blip represents the SART
- Unit transmits through the 9.2-9.5 GHz band marine radar when interrogated by radar
- Vessel mounting bracket and collapsible pole stowed inside SART
- Exclusive ACR Test mode for visual/audible feedback
- High impact, polystyrene case designed to withstand rugged environments
- Compact unit easily packs into life raft
- 10-meter (33-ft) lanyard for security
- Waterproof to 10 meters (33 ft)
- Requires lithium battery (5-year replacement life)
- Worldwide certification; complies with GMDSS, IEC, IMO/ SOLAS 88, ETSI 300 151 and RTCM standards
- Limited 1-year warranty
- Operational life: 96 hours in stand-by mode; in excess of 8 hours in operational mode

Application: Mandatory requirement for all vessels governed by GMDSS; any yacht or vessel carrying more than one life raft to accommodate crew and passengers

Size, unfolded: 31.75 H x 7.6 Dia. cm (12.5 H x 3 Dia. in)
Weight: 1.5 lbs (680 g)

STOCK CODE	BRIEF DESCRIPTION
GMDS-ACR-PATH3	ACR, 2714 PATHFINDER 3 SART, C/W: BRACKET & INTEGRAL POLE
GMDS-ACR-PATH3-01	ACR, 2714.4, BATTERY FOR PATHFINDER3

SURVIVAL RADIO

ACR 16/6 Survival Radio

2-channel VHF GMDSS Survival Craft Radio

- Transmits and receives on VHF Channels 16 and 6

Application: Commercial marine, petro-marine and all vessels that need to meet GMDSS requirements

STOCK CODE	BRIEF DESCRIPTION
GMDS-ACR-2726A	ACR, 2726A SURVIVAL RADIO, 16/6, 2-CHANNEL, C/W: 01 PCE LITHIUM BATTERY

ACR 2727 Survival Radio

Multi-channel VHF GMDSS Survival Craft Radio

- All maritime Simplex, including weather, channels
- Automatic selection of Channel 16 upon switch-on
- International version available (special order)

Application: Commercial marine, petro-marine and all vessels that need to meet GMDSS requirements

STOCK CODE	BRIEF DESCRIPTION
GMDS-ACR-2727	ACR, 2727 SURVIVAL RADIO, MULTI-CHANNEL, C/W: 01 PCE LITHIUM BATTERY

Common VHF radio features and specifications:
Size:2.6 W x 7.6 H x 1.7 D in (6.6 W x 19.0 H x 4.3 D cm)
Weight:1.0 lb (453 g) with lithium battery
Material:Polycarbonate blend
Operation:Simple touch pad for unskilled users/gloved hands
Waterproof:Up to 10 ft (3.3 m)
Method of Attachment:Coiled lanyard, belt clip, adjustable wrist strap
Frequency/Modulation:VHF FM
Battery Type:User-replaceable lithium (5-year replacement life)
Limited Warranty:1 year
Certification:Complies with GMDSS, SOLAS/IMO A.605(15), FCC approved; CE; A762.(18) A694.(17) A809.(19) IEC 945
Operating Life:8 hrs continuous (lithium); 2727 –up to 6 hrs (rechargeable, does not comply with GMDSS)

For more information or order,
please contact our Sales Team at
Tel: **(65) 6266-0788** or E-mail: **sales@noah.com.sg**

ACR Lithium Survival Battery
(spares for Survival Radio)

Lithium Battery Pack for GMDSS Survival Radio (5-year replacement life)

- Necessary to meet GMDSS requirements

STOCK CODE	BRIEF DESCRIPTION
GMDS-ACR-2727-01	ACR, 1066 LITHIUM BATTERY

ACR MaxCap™ Rechargeable Battery
(spares for Survival Radio)

Rechargeable battery pack for Survival Radio.

STOCK CODE	BRIEF DESCRIPTION
GMDS-ACR-2727-02	ACR, 1067 MAXCAP RECHARGEABLE BATTERY

ACR Charger XLT with MaxCap Rechargeable Battery

Trickle Charger for Rechargeable MaxCap™ Battery

- Comes with a rechargeable MaxCap™ NiCad battery
- Can be used with locally available alternative voltage power adapters

STOCK CODE	BRIEF DESCRIPTION
GMDS-ACR-2727-03	ACR, XLT CHARGER ONLY FOR MAXCAP RECHARGEABLE BATTERY
GMDS-ACR-2727-04	ACR, 2713 01 PCE MAXCAP RECHARGEAGLE BATTERY C/W 01 PCE XLT BATTERY CHARGER
GMDS-ACR-2727-05	ACR, 220VAC POWER ADAPTOR

IMMERSION SUITS

REVERE - IMPERIAL
USCG IMMERSION SUIT

STOCK CODE	BRIEF DESCRIPTION
IMMS-IMP-USCG	IMPERIAL, 1409-A, IMMERSION SUIT, USCG, ADULT
IMMS-IMP-USCGJ	IMPERIAL, 1409-J, IMMERSION SUIT, USCG, JUMBO

REVERE - IMPERIAL
EC IMMERSION SUIT

STOCK CODE	BRIEF DESCRIPTION
IMMS-IMP-ECA	IMPERIAL, 1409-ECA, IMMERSION SUIT, EC, ADULT
IMMS-IMP-ECJ	IMPERIAL, 1409-ECJ, IMMERSION SUIT, EC, JUMBO

For more information or order,
please contact our Sales Team at
Tel: **(65) 6266-0788** or E-mail: **sales@noah.com.sg**

SIZE	HEIGHT RANGE		WEIGHT RANGE	
	M	FT / IN	KG	LBS
Adult	1.5 to 1.9	5'4" to 6'3"	50 to 150	110 to 330
Intermediate	1.47 to 1.77	4'10" to 5'10"	Up to 81	Up to 180
Jumbo	Over 1.9	Over 6'3"	Over 150	Over 330
Child	Up to 1.5	Up to 59"	Up to 50	Up to 110

Features:

- Three-fingered mitt to keep your fingers warmer
  *Note: Suits should not be fully donned if in the wheel house but tied around the waist. This is a precaution to prevent entrapment in the wheel hous
- Two zipper tab pulls on zipper
  Each located at top and bottom of zipper. This cuts down on your donning time by allowing the zipper to be pulled straight up.
- Wide legs for quick donning
  Gives you the ability to don with shoes or boots on. Ankle straps to aid in walking.
- Toe valves that purge air
  Releases trapped air upon entering the water.
- Face Seal is soft and flexible making it comfortable to wear.
- High rider ring
  Keeps more of your whole upper body out of the water (U.S.C.G. and Canada C.G approved suits only).
- Back straps keep the ring in place.
- More Reflective tape on suit than required.
- Suits are true to size
  Please try any suit on before you buy.
- Sturdy carrying bag with two handles
  One handle on the side and one on the bottom for quick donning. Quality bag snaps are used tro help prevent corrosion.

Options:

- Personal Survival Kit Pocket
  This pocket zips right onto the high rider ring.
  Making a simple solution to a personal survival kit.
  Can hold E.P.I.R.B., spare glasses, midecation, flares, water, food, etc...
- Lifting Harness.
- Buddy Line to stay together
  Helps with rescuing and moral to be together.
- Suits can be stencilled upon request
  P.F.D. lights can be added, as well.
- Custom sized suits available

INTERNATIONAL APPROVAL CHART / MODEL NUMBERS						
SHIP'S REGISTRY	APPROVAL	ADULT SIZE	JUMBO SIZE	INTERMED SIZE	CHILD SIZE	FEATURES INCLUDED
EUROPEAN COMMUNITY	American Bureau of Shipping Notified Body 0729	1409-ECA	1409-ECJ	1409-ECO	- - - -	Storage Bag
U.S.A	USCG No. 160.171/2/0	1409-A	- - - -	- - - -	- - - -	High-Rider Ring & Storage Bag
U.S.A	USCG No. 160.171/3/0	- - - -	1409-J	- - - -	- - - -	High-Rider Ring & Storage Bag
U.S.A	USCG No. 160.171/21/0	- - - -	- - - -	1409-O	- - - -	High-Rider Ring & Storage Bag
U.S.A	USCG No. 160.171/4/0	- - - -	- - - -	- - - -	1409-C	High-Rider Ring & Storage Bag

Orange Bag Green Bag Red Bag Yellow Bag

CREWSAVER IMMERSION SUIT

The Crewsaver Immersion Suit is designed to meet the following IMO/ SOLAR regulations and is fully approved:

- Can be unpacked and donned, including warm inner clothing and a lifejacket, within two minutes.
- Is made from fire retardant neoprene.
- Covers the whole body except the face.
- Minimises trapped air.
- Withstands a jump into water from 4.5m.
- A typical wearer's core body temperature should not drop by more than 2ºC after six hours in calm water of 0-2ºC
- Meets various mobility & dexterity requirements, ensuring casualties can assist themselves.

STOCK CODE	BRIEF DESCRIPTION
IMMS-CRW-ZECA1	CREWSAVER IMMERSION SUIT, SIZE: UNIVERSAL, SOLAS/EC APPROVED

For more information or order,
please contact our Sales Team at
Tel: **(65) 6266-0788** or E-mail: **sales@noah.com.sg**

LALIZAS

LALIZAS HELLAS IMMERSION SUIT

It is well known that a person's chances of survival when immersed in water are improved only by the ability to remain dry and maintain the body temperature at a comfortable level. LALIZAS has designed its Immersion suit to protect you in situations where the danger of hypothermia is great, thereby greatly increasing your chances of survival. The LALIZAS Immersion suit is constructed from reinforced neoprene and incorporates a face seal and flap, 3 fingered gloves, front waterproof zipper, ankle cuffs, neoprene pocket and retro-reflective tape. All these features have been designed to protect you against cold, without diminishing the freedom of movement. Exceeding the latest SOLAS specifications for hypothermia protection, it is ideal use on board ferries, offshore drilling rigs, rescue boats, man-overboard boats and for general commercial use.

STOCK CODE	BRIEF DESCRIPTION
IMMS-LLZ-ECA	'NEPTUNE' IMMERSION SUIT, SIZE: UNIVERSAL SOLAS / EC APPROVED

LIFEJACKETS INHERENT(FOAM)

COSALT

COSALT PREMIER LIFEJACKETS 2010

The Cosalt Premier 2010 gives 190N inherent buoyancy and sees a new era in lifejacket design and performance.

The Adult lifejacket has a patented design Neck System that can adjust to the wearer's neck size so it can be worn by anyone from 43kg up to 140kg + still maintaining good face angles and mouth clearance above the water. The patented Reverse Angle Head Support holds the head at the optimum position for maximum in-water performance even if the wearer becomes unconscious. The lifejacket self rights in an average of 1.7 seconds.

Spray Hood, Crutch Straps and removable Hygiene Cover are available if required. There is a Hi Viz Yellow (Adult only) version available designed especially for Crew on cruise or passenger vessels. The Cosalt Premier 2010 Lifejacket is also available in Child size (15kg to 43kg 108N inherent buoyancy) and Infant size (up to 15kg 68N inherent buoyancy).

Note: come with Reflective Tape & Whistle ONLY
Approval: EC approved by LLYODS

STOCK CODE	BRIEF DESCRIPTION
JINB-COS-PMRA1	COSALT PREMIER 2010 SOLAS LIFEJACKET, 190N, ADULT
JINB-COS-PMRC1	COSALT PREMIER 2010 SOLAS LIFEJACKET, 108N, CHILD

NOAH

For more information or order,
please contact our Sales Team at
Tel: **(65) 6266-0788** or E-mail: **sales@noah.com.sg**

EVAL LIFEJACKETS

SOLAS 74, L.S.A. CODE, 96/98/EC MSC.200(80) & MSC.207(81)
Complete with retro-reflective tapes EN12402-8 approved whistle and two belt positions for lifejacket light installation (in front or on the side). Equipped with belt ending at a plastic hook so that the persons wearing it can strap together.

Constructed in accordance to international regulations IMO MSC.200(80) & MSC.207(81)

STOCK CODE	BRIEF DESCRIPTION
JINB-EVA-SOL2A	EVAL 2010-3 FOAM LIFEJACKET SOLAS 2010, 150N ADULT WITH WHISTLE
JINB-EVA-SOL2C	EVAL 2010-2 FOAM LIFEJACKET SOLAS 2010, 85N CHILD WITH WHISTLE
JINB-EVA-SOL2I	EVAL 2010-1 FOAM LIFEJACKET SOLAS 2010, 70N INFANT WITH WHISTLE

ADULT

CHILD

INFANT

DONG FANG LIFEJACKETS

STOCK CODE	BRIEF DESCRIPTION
JINB-CHN-ADULT-0	DONGFANG FOAM LIFEJACKET, 5564-1, C/W WHISTLE & REFLECTIVE TAPE, ADULT APPROVAL: CCS APPROVED TO SOLAS
JINB-CHN-CHILD	DONGFANG FOAM LIFEJACKET, 5566, C/W WHISTLE & REFLECTIVE TAPE, CHILD APPROVAL: CCS APPROVED TO SOLAS

HUA YAN LIFEJACKETS

STOCK CODE	BRIEF DESCRIPTION
JINB-CHN-WVEST	HUA YAN WORKVEST, DY93-1
JINB-DFG-WVEST-A	HUA YAN WORKVEST, DY93-3, C/W COLLAR AND BACK SLIT FOR HARNESS ENTRY

For more information or order,
please contact our Sales Team at
Tel: **(65) 6266-0788** or E-mail: **sales@noah.com.sg**

REVERE
Formerly known as Safegard

REVERE LIFEJACKETS
USCG APPROVED TYPE 1 PFD

Note: come with Reflective Tape ONLY
Approval: U.S.C.G. (US Coast Guard)

A USCG approved TYPE I PFD. Designed to turn an unconscious person from face down in the water to a vertical or slightly backward position. Permafloat foam provides in excess of 24 lbs. of flotation and will not lose buoyancy if cut or punctured. Units with reflective tape (RT) meet or exceed all requirements for commercial vessels carrying passengers for hire. The safest and most comfortable TYPE I availabe. Reversible design.

STOCK CODE	BRIEF DESCRIPTION
JINB-SFG-198RT	SAFEGARD LIFE PRESERVER 198RT, TYPE I

REVERE LIFEJACKETS

Note: come with Reflective Tape ONLY
Approval: U.S.C.G. (US Coast Guard)

Rugged and durable vinyl-dipped work vest for all industrial applications. Flotation foam retains buoyancy even when punctured. Acrylic layer sealant over PVC coating resists deterioration and is easy to clean. Large opening on back panel accommodates most brands of fall protection harnesses. 17-1/2 lbs. of buoyancy. USCG Approved Type V Work Vest for 32" to 54" chest size range. CFR 160.053 compliant and CFR 1926.106 (OSHA) compliant.

STOCK CODE	BRIEF DESCRIPTION
JINB-SFG-280RT	WORK VEST 280RT, TYPE V

LIFEJACKETS INFLATABLE

CREWSAVER CSR 150N (SINGLE CHAMBER)

The CSR Lifejacket is a high quality, high performance product widely available at a very competitive price and packed full of features to keep you safe on the water.

The CSR 150N Inflatable Lifejacket is available with either an Automatic or Manual inflation mechanism fitted, with or without harness. Compact and comfortable to wear, both options feature:

- Durable outer cover
- High frequency welded and high visibility inflation chamber with easy to follow, printed folding guide for repacking
- Adjustable back strap
- Factory fitted crotch strap
- Lanyard for manual inflation
- Mouth inflation tube and whistle
- Retro-reflective tape

STOCK CODE	BRIEF DESCRIPTION
JINF-CRW-CSRS1	1092-AUTO CREWSAVER, CSR, 1092-AUTO INFLATABLE LIFEJACKET 150N, AUTOMATIC (RED & BLUE) C/W 33GM CO2 CYLINDER, ADULT

CREWSAVER FREEDOM 150N (SINGLE CHAMBER)

Inflatable Lifejackets that fall under the 150N buoyancy category include the Crewfit, Freedom and Crewfit Junior. These are suitable for both swimmers and non-swimmers and for use in offshore waters in all but the most severe conditions.

- Hammar Automatic mechanism fitted as standard
- Manufactured to same high quality as the Crewfit range
- Available with or without harness
- Factory fitted thigh straps and 3 year guarantee

STOCK CODE	BRIEF DESCRIPTION
JINF-CRW-FDMS1	1270-H CREWSAVER, FREEDOM, 1270-H INFLATABLE LIFEJACKET 150N, AUTOMATIC GAS HAMMAR AND HARNESS (NAVY COVER) C/W 33GM CO2 CYLINDER, ADULT
JINF-CRW-FDMS2	1270-H+H CREWSAVER, FREEDOM, 1270-H+H INFLATABLE LIFEJACKET 150N, AUTOMATIC GAS HAMMAR AND HARNESS (NAVY COVER) C/W 33GM CO2 CYLINDER, ADULT

For more information or order,
please contact our Sales Team at
Tel: **(65) 6266-0788** or E-mail: **sales@noah.com.sg**

CREWSAVER CREWFIT INFLATABLE LIFEJACKETS NON HARNESS 150N

- An ideal everyday use Lifejacket
- Fitted with quick lock high strength plastic buckle
- This range offers the most variations
- Short Adult (SA) version for teenagers and shorter adults
- Factory fitted thigh straps and 3 year guarantee
- Easily repackable after use

STOCK CODE	BRIEF DESCRIPTION
JINF-CRW-CFTS1	1058-RADA CREWSAVER, STANDARD AUTOMATIC INFLATION, ADULT
JINF-CRW-CFTS3	1058-RADH CREWSAVER, HAMMAR AUTOMATIC INFLATION, ADULT

	Manual	Auto	Hammar
Red	1058-RADM	1058-RADA	1058-RADH
SA Red	1058-RSAM	1058-RSAA	
Navy	1058-BADM	1058-BADA	1058-BADH
Black			1058-BLKH

CREWSAVER CREWFIT INFLATABLE LIFEJACKETS HARNESS 150N

- An ideal everyday use Lifejacket
- Heavy duty harness belt with stainless steel 'D' ring and buckle
- This range offers the most variations
- Short Adult (SA) version for teenagers and shorter adults
- Factory fitted thigh straps and 3 year guarantee
- Easily repackable after use

STOCK CODE	BRIEF DESCRIPTION
JINF-CRW-CFTS2	1060-RADA CREWSAVER, STANDARD AUTOMATIC INFLATION, ADULT, WITH HARDNESS

	Manual	Auto	Hammar
Red	1060-RADM	1060-RADA	1060-RADH
SA Red	1060-RSAM	1060-RSAA	
Navy	1060-BADM	1060-BADA	1060-BADH
Black			1060-BLKH

CREWFIT TWIN 2010

The Crewfit Twin 2010 is designed to meet the new SOLAS 2010 regulations according to MSC 81(70) as amended by MSC 200(80) and MSC 207(81). The Crewfit Twin 2010 outperforms the new requirements, providing increased performance in the most demanding environments. Improved body angle, mouth freeboard and face plane angles make the Crewfit Twin 2010 even safer at sea. Together with the improved rotating times, the new unique inflation chamber (patend pending) is fitted with twin Auto Hammar mechanisms, providing unrivaled comfort as well as support.

- Twin chamber 275N MSC 200 (80) / SOLAS approved Lifejacket
- Uses 2 x 60g cylinders on a symmetrical inflation chamber
- Fall Arrest and deck harness options
- Optional spray hood available

CODES

1154-HDHAMM: With hood, Heavy Duty Cover, non harness
1154-HDH+H: With hood, Heavy Duty Cover, harness
1154-HAMM: With hood, non harness
1154-H+H: With hood, harness
1153-PLUS: With fall arrest harness (no hood)

STOCK CODE	BRIEF DESCRIPTION
JINF-CRW-CFTT5	CREWSAVER, CREWFIT TWIN 2010, 275N MSC 200 (80)/SOLAS APPROVED LIFEJACKET

For more information or order,
please contact our Sales Team at
Tel: **(65) 6266-0788** or E-mail: **sales@noah.com.sg**

SEACREWSADER 2010

The SEACREWSADER 2010 is designed to meet the new SOLAS 2010 regulations according to MSC 81(70) as amended by MSC 200(80) and MSC 207(81) The SEACREWSADER 2010 outperforms the new requirements, providing increased performance in the most demanding environments. Improved body angle, mouth freeboard and face plane angles make the SEACREWSADER 2010 even safer at sea. Together with the improved rotating times, the new unique inflation chamber (patend pending) is designed to provide unrivaled comfort and support.

CODES

1143-AUTO: With hood, non harness
1143-AUTOH: With hood, incl. safety harness
1143-HDAUTO: With hood, Heavy Duty Cover, non harness
1143-HDAUTOH: With hood, Heavy Duty Cover, harness
1143-FRAUTO: With hood, Fire Resistant cover, non harness
1143-FRAUTOH: With hood, Fire Resistant cover, harness
1142-PLUS: With fall arrest harness (no hood)

STOCK CODE	BRIEF DESCRIPTION
JINF-CRW-SCDT1	CREWSAVER, SEACREWSADER TWIN 2010, 275N MSC 200 (80)/SOLAS APPROVED LIFEJACKET

INFLATABLE LIFEJACKET ACCESSORIES

Crewsaver produce a full range of accessories to complement your Lifejacket.
Where necessary, detailed instructions are supplied with each accessory pack.

REPLACEMENT CO2 CYLINDERS

STOCK CODE	BRIEF DESCRIPTION
JINF-CRW-YCYLD-23	CREWSAVER, 10479, 23G FOR JUNIOR CREWFITS
JINF-CRW-YCYLD-33	CREWSAVER, 10014, 33G FOR CREWSAVER 150N LIFEJACKETS
JINF-CRW-YCYLD-60	CREWSAVER, 10470, 60G FOR CREWSAVER 275N LIFEJACKETS

RE-ARMING KIT

STOCK CODE	BRIEF DESCRIPTION
JINF-CRW-YINFL-01	CREWSAVER, 10012, MK3A AUTO CAPSULE AUTO CAPSULE (SERIAL NOS. STARTING WITH 0 TO 9 OR R)
JINF-CRW-YINFL-02	CREWSAVER, 10017, MK5I AUTO CAPSULE AUTO CAPSULE (SERIAL NOS. STARTING WITH P&T
JINF-CRW-YINFL-07	CREWSAVER, 11042, AUTO CAPSULE AUTO CAPSULE FOR CSR / SEA CRUSADER / OMEGA
JINF-CRW-YINFL-05	CREWSAVER, 11014 HAMMAR AUTO KIT FOR HAMMAR LIFEJACKET

AUTO CAPSULE

HAMMAR AUTO KIT

ACCESSORIES

Thigh Straps

- Hold the wearer in a safer position when in the water
- Can be retro fitted to all Crewsaver Inflatable Lifejackets
- Detailed instructions included

STOCK CODE	BRIEF DESCRIPTION
JINF-CRW-CFTS1-02	CREWSAVER, 10032 THIGH STRAPS - ONE PAIR - SUITABLE FOR INFLATABLE LIFEJACKETS

Spray Hood

- Stored in a pouch on the waist belt
- Fits over the wearer's head and the inflated Lifejacket
- Reduces spray being inhaled
- Makes the wearer more visible

STOCK CODE	BRIEF DESCRIPTION
JINF-CRW-ZHOOD-A	10040 SPRAY HOOD - FITS CREWFIT 150N & 275N & FREEDOM LIFEJACKETS - RED OUTER
JINF-CRW-ZHOOD-B	10050 SPRAY HOOD - FITS CREWFIT 150N & 275N & FREEDOM LIFEJACKETS - NAVY OUTER

For more information or order,
please contact our Sales Team at
Tel: **(65) 6266-0788** or E-mail: **sales@noah.com.sg**

Secumar life jackets can stand up to hard work !
Developed and designed for continuous use in all types of environments on or at the water - inland navigation or in international waters.

SECUMAR 275N ALPHA SERIES - TWIN SOLAS APPROVED

State-of-the-art technology SOLAS lifejacket

- Designed to meet the new SOLAS 2010 regulations according to MSC 81(70) as amended by MSC 200(80) and MSC 207(81). ISO 12402-2 (CE Marking), EN1095 (harness version only).
- Innovative buoyancy chamber which emphasis lies on the three-dimensional shaping that is a quantum leap in development process.
- Patented folding system means extraordinary flat when packed for maximum comfort
- Uses 2 x 60g cylinders on a symmetrical inflation chamber
- Spraycap included
- Particularly recommended for users of immersion suits / insulated clothing / dry suits / survival suits as offers exceptional self-righting properties

STOCK CODE	BRIEF DESCRIPTION
JINF-SCM-ZALPT-3	SECUMAR ALPHA 275-3D TWZ, 275N TWIN SOLAS (CLICK 50, 4001S/401, 2X CO2 60G, SPRAYCAP), 13806
JINF-SCM-ZALPT-4	SECUMAR ALPHA 275-3D TWZ H, 275N TWIN SOLAS (CLICK 50, 4001S/401, 2X CO2 60G, SPRAYCAP), 13807

SECUMAR 150N GOLF SERIES - TWIN SOLAS APPROVED

A long-term proven and tested series of navy blue coloured all round lifejackets - simple standard, but top in quality.

Different buoyancy chamber sizes and a selection of protective covers are ready to face rough work tasks for industrial and professional application (water engineering, inland waterways, offshore, high seas)

The SOLAS version incorporates twin buoyancy chambers and have two separate inflation devices.

- Designed to meet the new SOLAS 2010 regulations according to MSC 81(70) as amended by MSC 200(80) and MSC 207(81).
- Uses 1 x 38g and 1 x 32g cylinders on a symmetrical inflation chamber

STOCK CODE	BRIEF DESCRIPTION
JINF-SCM-GOFT4	SECUMAR GOLF 275 TWIN SOLAS LIFEJACKET (SECUMATIC 3001S, CO2 60G + 301SM, 56G), 13970

NOTE: Golf 150 Twin Solas is now available in option: with SPR Protection Cover for welding and hard wearing purposes (washable)

SECUMAR 150N GOLF SERIES

SOLAS APPROVED

A good value, this fully automatic inflatable life jacket is for tough jobs. Buoyancy chamber and protective cover are separate components and in the case of wear and tear can be replaced independently of each other. Protective cover made of robust nylon fabric. Very light and with a compact design.

• Uses 2 x 32g cylinders on a symmetrical inflation chamber

STOCK CODE	BRIEF DESCRIPTION
JINF-SCM-GOFS1	SECUMAR, P/N 124 GOLF 150N SINGLE , INFLATABLE LIFEJACKET
JINF-SCM-ZGOFS-3	SECUMAR GOLF 150 SPR-ORANGE INF. LIFEJACKET (SECUMATIC 3001S, CO2-CYLINDER 32G), 13037
JINF-SCM-ZGOFS-4	SECUMAR GOLF 275 SPR-ORANGE INF. LIFEJACKET (SECUMATIC 3001S, CO2-CYLINDER 56G), 13039

NOTE: Golf 150 is now available in option: with SPR Protection Cover for welding and hard wearing purposes (washable)

SECUMAR LIFEJACKETS 150N PRIVA SERIES - SINGLE

SOLAS APPROVED

Universal application, for inland waterways, in-shore and off-shore waters.

STOCK CODE	BRIEF DESCRIPTION
JINF-SCM-PRVS1-A	SECUMAR, PRIVA, 10493, 150L INF. LIFEJACKET HARNESS, RED, (SECUMATIC 3001, CO2-CARTRIDGE 32G), 10493

NOAH

For more information or order,
please contact our Sales Team at
Tel: **(65) 6266-0788** or E-mail: **sales@noah.com.sg**

OPTIONAL EQUIPMENT AND ACCESSORIES

STOCK CODE	BRIEF DESCRIPTION
JINF-SCM-YCYLD-32	SECUMAR 32GM CO2 - CARTRIDGE AUTO (WITHOUT PILL)
JINF-SCM-YCYLD-56	SECUMAR 56GM CO2 - CARTRIDGE AUTO (WITHOUT PILL)
JINF-SCM-YCYLD-60	SECUMAR 60GM CO2 - CARTRIDGE AUTO (WITHOUT PILL)
JINF-SCM-YINFL-04	SECUMAR AUTO PILLS - FOR INFLATOR 3001S
JINF-SCM-ZX401	SECUMAR MANUAL OVERRIDE 4001S
JINF-SCM-ZX301	SECUMAR MANUAL OVERRIDE 3001S

PILLS FOR INFLATOR 3001S

PILLS CAGE FOR INFLATOR 4001S

CO2 RE-ARMING KITS WITH 2 PILLS

Manual Override

The manual override insert disarms the automatic function and thus prevents unwanted activation upon water contact.

MANUAL OVERIDE 3001S

MANUAL OVERIDE 4001S

LIFEBUOY LIGHTS

ACR LIFEBUOY LIGHT

Automatic Crew-Overboard Marker Light
with Bulkhead Bracket.

- Bright light in all directions
- 360 deg visibility for more than 3 miles (4.8km)
- High intensity Xenon strobe
- Upgraded, polycarbonate blend case (drop-tested 100 ft (30 meters)
- Improved impact rating; UV, temperature and chemical-resistant
- Automatically rights itself and activates when in the water
- Extremely durable; withstands vigorous use
- Tested to UL 1196

STOCK CODE	BRIEF DESCRIPTION
LBOY-ACR-SM2	"ACR" SM2, P/N: 3940.1, LIFEBUOY LIGHT, C/W: BRACKET
LBOY-ACR-SM2..-01	"ACR" TOP CAP & POLE STROBE FOR SM2

For more information or order,
please contact our Sales Team at
Tel: **(65) 6266-0788** or E-mail: **sales@noah.com.sg**

EVAL LIFEBUOY LIGHT

Lifebuoy Light Solas 74, L.S.A Code, 96/98/EC

• Automatic switch-on at overturning. Powered with 4 Alkaline batteries LR20 type D. Provided light at least 2cd and for at least 2 hours.
Weight:205 gr. Length: 34cm.

STOCK CODE	BRIEF DESCRIPTION
LBOY-EVA-BLTE1	"EVAL" SOLAS LIFEBUOY LIGHT C/W LIFEBUOY LIGHT BRACKETS

LIFEJACKET LIGHTS

ACR AUTO HEMILIGHT2

The choice of cruise lines worldwide, the Hemilight2 is a SOLAS and USCG Approved flashing survivor light that attaches to almost any style lifejacket. It is smaller than other approved lights and features rounded edges to maintain inflatable lifejackets' integrity. The water sensor activates when in contact with salt or fresh water, producing visibility upto 1.7nm (3.2km).

Water-activated LED flashing survival light with manual deactivation switch.
Meets USCG and SOLAS requirements.
Attachment loops accommodate up to 5 cm (2 in) wide webbing.
Rounded edges to maintain integrity of inflatable life jackets.
Smaller than other approved lights.
Highly visible flashing LED light.
Marine tough design for years of useful service.
Size: 2.75 x 1.6 x 1.6 in; Weight: 1.9oz (with clip installed)
Approval: USCG SOLAS, MED SOLAS APPROVED

STOCK CODE	BRIEF DESCRIPTION
LPER-ACR-HEMIB	"ACR" HEMILIGHT2, 3768, HL8-10 LIFEJACKET LIGHT, AUTOMATIC

For more information or order,
please contact our Sales Team at
Tel: **(65) 6266-0788** or E-mail: **sales@noah.com.sg**

C-Light™ with C-Clip

Emergency Signalling Light

The C-Light is designed to meet the demands of the sea, but is a reliable, multi-purpose light whenever efficient lighting is needed. Equipped with a multi-faceted refracting lens, the C-Light creates a twinkling effect perfect for signaling and is visible for up to 1.7 nm (3.2 km). Comes with a C-Clip adapter for life jackets, as well as steel clip and Velco strap for mounting flexibility.

- Slim, corrosion-resistent case is lightweight and designed for high-visibility
- Lens intensifies light up to 20 times at the horizon and 75 times at the vertical cone of light
- More than 8 hours continuous operation

Size: 5.6x 1.5 in
Weight: 1.3 oz
(without battery)

STOCK CODE	BRIEF DESCRIPTION
LPER-ACR-CLITE	ACR C-LIGHT, 3355, PFD VEST LIGHT

C-Strobe™ with C-Clip

Emergency Signaling Strobe

A super-bright Xenon flash tube strobes 60 times per minute for superior emergency signaling that is visible for up to 1.7 nm (3.2 km). The slim, lightweight design keeps it out of the way until needed, and the supplied C-Clip adapter for life jackets grips snugly around most oral inflation tuves. Supplied steel clip and Velcro strap provide additional mounting options.

- Waterproof to 10 ft (3m)
- Simple twist on/off operation
- More than 8 hrs continuous operation

Size: 6.0 x 1.6 in
Weight: 2.6 oz
(without battery)

STOCK CODE	BRIEF DESCRIPTION
LPER-ACR-3959	ACR C-STROBE, 3959, WITH CLIP SIGNALING STROBE LITE

ACR FIREFLY® PLUS

Combo Strobe/Incandescent Light

Dual-featured and incredibly compact, this powerful strobe and flashlight combo is the perfect emergency signaling device for recreational boaters. At only 4 oz (115g), it can even fir in a diver's BC pocket. The signal is visible for up to 1.7 nm (3.2 km), and the strobe functions for 10 hours of continous operation (2hours inincandescent mode).

- Waterproof to 328 ft (100m)
- Krypton bulb provides 360° omnidirectional beam
- High-visibility orange ABS plastic constructin is fully buoyant

Size: 5.3 x 1.5 in
Weight: 4.0 oz
(without battery)

STOCK CODE	BRIEF DESCRIPTION
LPER-ACR-1916	ACR FIREFLY PLUS, 1916, STROBE/FLASHING COMBO LIGHT

NOAH

For more information or order,
please contact our Sales Team at
Tel: **(65) 6266-0788** or E-mail: **sales@noah.com.sg**

DONGFANG

DONGFANG LIFEJACKET LIGHT

STOCK CODE	BRIEF DESCRIPTION
LPER-DFG-DFYD1	DFYD-L-B, WATER-ACTIVAED LIFEJACKET LIGHT, CCS APPROVED

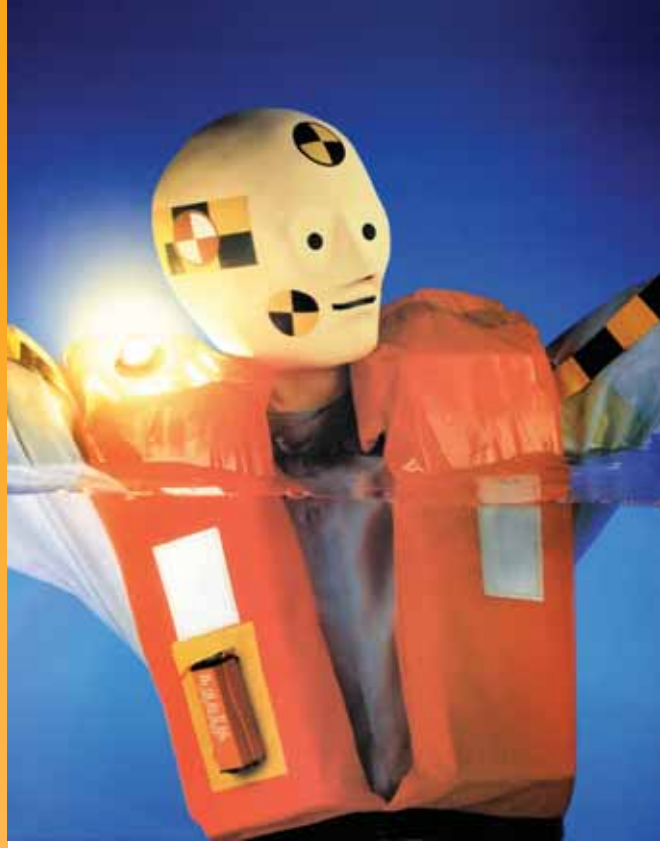

Electric Fuel®

ELECTRIC FUEL LIFEJACKET LIGHT

LPER-ELF-LDX

- Fully automatic activation in fresh & salt water
- Steady light
- Compact and lightweight
- Supplied with fast-attach clip
- Ideal for cruise and ferry passengers - no accidental extingushing
- SOLAS, MED and USCG approved
- Light Intensity: Minimum 0.75cd throughout upper hemisphere
- Light Type: Steady

LPER-ELF-MX8

- Dependable water-activated light
- Works in fresh and salt water
- Safe and environmentally friendly - magnesium cuprous chloride battery
- Supplied with fast-attach clip
- SOLAS, MED, USCG and RMRS approved
- Light Intensity: Minimum 0.75cd throughout upper hemisphere
- Light Type: Steady

STOCK CODE	BRIEF DESCRIPTION
LPER-ELF-LDX	"ELECTRIC FUEL" LDX LIFEJACKET LIGHT WATER-ACTIVATED
LPER-ELF-MX8	"ELECTRIC FUEL" WAB-MX8 LIFEJACKET LIGHT WATER-ACTIVATED

NOAH

For more information or order,
please contact our Sales Team at
Tel: **(65) 6266-0788** or E-mail: **sales@noah.com.sg**

LIFEJACKET WHISTLES

ACR LIFEJACKET WHISTLE

- Complies with USCG, SOLAS 74/83; required by SOLAS 83
- Developed for US Navy to locate overboard persons
- Loud, shrill, 102 dBm dual tone audible from great distance
- Unique, flat design prevents holding water
- 18-in (46-cm) lanyard attaches to life jackets, rafts and foul weather gear
- Value pack contains two whistles with lanyards on blister card

Size: 1.0 W x 2.0 H x .25 D in (2.5 W x 5.0 H x .6 D cm);
Weight: 1.4 oz (40 g)

STOCK CODE	BRIEF DESCRIPTION
JINB-ACR-XWHSL	ACR WW-3 RES-Q, P/N: 2227, WHISTLE, USCG

LIFEJACKET WHISTLE

STOCK CODE	BRIEF DESCRIPTION
JINB-CHN-XWHSL	CHINA WHISTLE, PLASTIC

LIGHTS - PORTABLE HANDHELD

LIGHTHAWK™ FIRE LANTERN

Available in AC or DC MODEL; 4 OR 6 CELL; YELLOW
LIGHT OUTPUT / BULB LIFE: 120,000 candlepower / 265 Lumens / 100 hours

KEY FEATURES:
Wall/vehicle mountable; lightweight (1.9lbs); rugged nylon constuction; LED battery status indicator; waterproof; non-slip rubber bottom and handle; fixed or articulating head; high-visibility flashing LED tail light; optional seat belt-style strap; lithium ion battery technology.

SAFETY APPROVALS:
UL: Class 1, Division 2, Groups A, B, C and D
Class 2, Division 2, Groups E and F
Operating Temp T1
CSA: Class 1, Division 2, Groups A, B, C and D
Operating Temp T1
NFPA: 1901-14..11.2 (2003) Certified Mounted in any Positon

STOCK CODE	BRIEF DESCRIPTION
LPHL-KBS-7852	BRIGHTSTAR, 07852 LIGHTHAWK™ 4 CELL FIRE LANTERN. 100V TO 220V AC PLUG
LPHL-KBS-7815	BRIGHTSTAR, 07857 LIGHTHAWK™ 6 CELL FIRE LANTERN. 220V AC PLUG, 07815

For more information or order,
please contact our Sales Team at
Tel: **(65) 6266-0788** or E-mail: **sales@noah.com.sg**

60102

Holster

RAZOR

RAZOR™ WORKSAFE INTRINSIC LED SERIES

Available in Black (60100); Hi-Vis Green (60101); Safety Orange (60102)
LIGHT OUTPUT: 60 lumens; 1850+Lux AT 6FT.
RUNTIME: 100+hours

KEY FEATURES:
Deep Dish Reflector; Ergonomically designed push button switches; Knurled handle for maximum grip; waterproof

SAFETY APPROVALS:
Intrinsically Safe-Zone Zero
Worldwide Safety standard: IECEx Exia IIC T4 iaD T135C Ga, Da
(Equivalent to UL Rating - Class 1, Division 1 Groups A, B, C, D, T4 and Class 2 Division 1 Groups E,F,G, T4)
European Safety Standard: ATEX II 1 GD Exia IIC T4 aiD T135C

STOCK CODE	BRIEF DESCRIPTION
LPHL-KBS-60100	BRIGHTSTAR, 60100, RAZOR, BLACK, 3-AA LED
LPHL-KBS-60101	BRIGHTSTAR, 60101, RAZOR, HI-VIS GREEN, 3-AA LED
LPHL-KBS-60102	BRIGHTSTAR, 60102, RAZOR, SAFETY ORANGE, 3-AA LED
LPHL-KBS-XHOLD-06	BRIGHTSTAR, 27425, RAZOR HOLSTER, NYLON WEBBING

RESPONDER

BRIGHTSTAR RESPONDER RIGHT ANGLE SERIES

RESPONDER RIGHT ANGLE, RECHARGEABLE MODEL
Division 1 orange responder with ni-cad battery pack
LIGHT OUTPUT / BULB LIFE: Up to 45,000 candlepower . 50hrs

KEY FEATURES:
Rugged nylon housing; microprocessor controlled; LED battery status indicator; co-axial AC power pack; automative DC power cord; wall/ vehicle mountablel; 2-hour charging time; safe-to-touch charging contacts. Charger Base included.

STOCK CODE	BRIEF DESCRIPTION
LPHL-KBS-50241	BRIGHTSTAR, 500241, 4C-CELL RECHARGEABLE DIVISION 1 C/W: - 01 PCE NI-CAD BATTERY PACK - QUICK CHARGER II, 220VAC AND - 12VDC PLUG (500304)
LPHL-KBS-50241-01	BRIGHTSTAR, 20641, 120VAC ADAPTOR FOR 3C & 4C FLASHLIGHTS
LPHL-KBS-50241-02	BRIGHTSTAR, 20634, 230V EURO ADAPTOR FOR 3C & 4C CHARGER
LPHL-KBS-50241-03	BRIGHTSTAR, 500201-N, REPLACEMENT NI-CAD BATTERY FOR THE RESPONDER RA, DIV 1
LPHL-KBS-50241-04	BRIGHTSTAR, 500220, QUICK CHARGER BASE FOR 4C RESPONDER

500241 Responder

500400
4C-Cell Charger

500304 Responder

RESPONDER RIGHT ANGLE
500304 - Division 1 orange light with 4C-CELL Alkaline batteries.
LIGHT OUTPUT / BULB LIFE: Up to 50hrs on our Alkaline Version.

KEY FEATURES:
Passes 3o-ft drop test; waterproof; 2-hour charge time; lightweight; two spare bulb compartments; halogen bulb; imprinting available.

STOCK CODE	BRIEF DESCRIPTION
LPHL-KBS-50304	BRIGHTSTAR, 500304, 4C-CELL RESPONDER, RIGHT ANGLE, DIVISION 1, ALKALINE

NOAH

For more information or order,
please contact our Sales Team at
Tel: **(65) 6266-0788** or E-mail: **sales@noah.com.sg**

BRIGHTSTAR RESPONDER SERIES

3C-CELL SUBMERSIBLE ORANGE FLASHLIGHT MODEL #19101
Also available: 19102(Yellow); 19104(Black)
Available as a rechargeable: 19111(Orange); 19112(Yellow); 19114(Black)LIGHT OUTPUT / BULB LIFE: 50,000 candlepower / 30hours
KEY FEATURES: UL Division 1 & 2 approved; submersible to 100ft; non-conductive; passes 30-ft. drop test; waterproof; push button switch; pre-focused spot beam; key ring; limited lifetime warranty.
#500299 Charger Base for 3C with AC and DC Cords.

19112 Responder with Quickcharger

STOCK CODE	BRIEF DESCRIPTION
LPHL-KBS-19112	BRIGHTSTAR, 19112, 3C-CELL RECHARGEABLE DIVISION 1 C/W 1 PCE NI-CAD BATTERY PACK, QUICK CHARGER II, 220VAC ADAPTOR (MODEL # 19101)
LPHL-KBS-19112-01	BRIGHTSTAR, 19112, REPLACEMENT N-CAD BATTERY FOR THE RESPONDER 3C, DIV 1 & 2
LPHL-KBS-19112-X1	BRIGHTSTAR, 500202-N, CHARGER BASE WITH AC AND DC PLUGS FOR 3C
LPHL-KBS-50241-01	BRIGHTSTAR, 500299, 120VAC ADAPTOR FOR 3C & 4C FLASHLIGHTS (OLD CODE 500170)
LPHL-KBS-50241-02	BRIGHTSTAR, 20641, 230V EURO ADAPTOR FOR 3C & 4C CHARGE (OLD CODE 500190)
LPHL-KBS-50241-05	BRIGHTSTAR, 20634 ,12/24VDC CHARGER FOR 3C & 4C FLASHLIGHTS
LPHL-KBS-19102	BRIGHTSTAR, 19102, RESPONDER 3C-CELL FLASHLIGHT (19101), ALKALINE

19102 Responder

2C-CELL SUBMERSIBLE ORANGE FLASHLIGHT MODEL #200201
Also available: 200202(Yellow); 200203(Black)
LIGHT OUTPUT / BULB LIFE: 50,000 candlepower / 15hours
KEY FEATURES: UL Division 1 & 2 approved; submersible to 100ft; non-conductive; xenon bulb; pre-focused spot beam; push button switch; impact resistant; passes 30-ft. drop test; limited lifetime warranty.

200202 Responder

2AA-CELL SUBMERSIBLE ORANGE POCKETLIGHT MODEL #200301
Also available: 200302(Yellow); 200303(Black)
LIGHT OUTPUT / BULB LIFE: 30,000 candlepower / 15hours
KEY FEATURES: UL Division 1 & 2 hazardous location certified; submersible to 100ft; non-conductive; xenon bulb; pre-focused spot beam; push button switch; passes 30-ft. drop test; limited lifetime warranty.

200302 Responder

2AAA-CELL SUBMERSIBLE ORANGE POCKETLIGHT MODEL #19301
Also available: 19302(Yellow); 19304(Black)
LIGHT OUTPUT / BULB LIFE: 10,000 candlepower / 20hours
KEY FEATURES: UL Division 1 & 2 hazardous location certified; submersible to 500ft; xenon bulb; passes 30-ft. drop test; limited lifetime warranty.

19302 Responder

STOCK CODE	BRIEF DESCRIPTION
LPHL-KBS-20022	BRIGHTSTAR, 200202, RESPONDER 2 C-CELL FLASHLIGHT (200201), ALKALINE
LPHL-KBS-ZBUB2-C	BRIGHTSTAR, 20351, REPLACEMENT BULB FOR 2C RESPONDER
LPHL-KBS-20032	BRIGHTSTAR, 200302, 2-AA CELL RESPONDER FLASHLIGHT (200301), ALKALINE
LPHL-KBS-ZBUB2-A2	BRIGHTSTAR, 22313, REPLACEMENT BULB FOR 2AA SWIVEL
LPHL-KBS-19302	BRIGHTSTAR, 19302, RESPONDER 2-AAA WITH LIGHT BENDER & BATTERIES

WORKSAFE SERIES

2206

6 VOLT WATERPROOF LANTERN MODEL#2206
LIGHT OUTPUT / BULB LIFE: 50,000 candlepower / 15hours
KEY FEATURES: hazardous atmosphere safe; Division 1 UL & CUL approved; Krypton bulb; 200-yard beam projection; switch guard; spare bulb compartments; oversized reflector; glove-sized handle; circuit breaking mechanism.

2217

2 D-CELL FLASHLIGHT MODEL #2217(WATERPROOF)
LIGHT OUTPUT / BULB LIFE: 10,000 candlepower / 15 hours
KEY FEATURES: hazardous atmosphere safe; Division 1 UL & CUL approved; low maintenance cost; spare bulb compartment; crush-resistant; 250,000 cycle positive locking switch; switch guard; anti-roll tube; over-sized faceted reflector; unbreakable lens. #2217 has a 3-way switch.

2224

3 D-CELL FLASHLIGHT MODEL #2224(WATERPROOF)
LIGHT OUTPUT / BULB LIFE: 15,000 candlepower / 15 hours
KEY FEATURES: hazardous atmosphere safe; Division 1 UL & CUL approved; low maintenance cost; spare bulb compartment; crush-resistant; switch guard; unbreakable lens ; 250,000 cycle positive locking switch; anti-roll tube; over-sized faceted reflector; . #2224 has a 3-way switch.

2317C

2 D-CELL INTERNATIONAL SAFETY FLASHLIGHT MODEL #2317C
LIGHT OUTPUT / BULB LIFE: 4,500 candlepower / 30 hours
KEY FEATURES: ATEX approved for hazardous locations; top loader; anti-roll tube; anti-static material; 3-way switch: on/off/flash; waterproof locking screw; unbreakable safety lens; ring hanger.

2208

6V UTILITY LANTERN MODEL #2208
LIGHT OUTPUT / BULB LIFE: 30,000 candlepower / 15 hours
KEY FEATURES: hazardous atmosphere safe; weatherproof; oversized reflector; glove sized handel and switch; dual battery compartment; 120 degree pivoting head.

STOCK CODE	BRIEF DESCRIPTION
LPHL-KBS-2206	BRIGHTSTAR WATERPROOF LANTERN, 07050
LPHL-KBS-2217	BRIGHTSTAR WATERPROOF WITH 3-WAY SWITCH, 14460
LPHL-KBS-2224	BRIGHTSTAR WATERPROOF WITH 3-WAY SWITCH, 14720
LPHL-KBS-2317C	BRIGHTSTAR INTERNATIONAL SAFETY FLASHLIGHT, ATEX APPROVAL, 16850
LPHL-KBS-2208	BRIGHTSTAR UTILITY LANTERN, PIVOTING HEAD, 07570

For more information or order,
please contact our Sales Team at
Tel: **(65) 6266-0788** or E-mail: **sales@noah.com.sg**

WORKSAFE INTRINSIC LED PENLIGHT, ION

Intrinsically Safe-Zone Zero
POWER SOURCE: 3 AAAA 1.5V Alkaline Batteries
LIGHT OUTPUT: 25 Lumens; 255 LUX at 3 Meters
RUNTIME: Up to 20 Hours on 3 AAAA Batteries
KEY FEATURES: Waterproof; Lightweight; Super Tough Nylon Body

STOCK CODE	BRIEF DESCRIPTION
LPHL-KBS-Z6020	BRIGHTSTAR, 60200, ION, PENLIGHT, 3-AAAA, LED, ZONE ZERO

BRIGHTSTAR HEAVY DUTY INDUSTRIAL FLASHLIGHTS

2 D-CELL YELLOW FLASHLIGHT MODEL #2618
LIGHT OUTPUT / BULB LIFE: 17,000 candlepower / 15hours
KEY FEATURES: crush-resistant; distortion-free faceted reflector; 250,000 cycle switch guard; unbreakable lens w/snap-in wand ring; non-slip grip; anti-roll tube; spare bulb holder, Krypton bulb.

2618

STOCK CODE	BRIEF DESCRIPTION
LPHL-KBS-2618	BRIGHTSTAR FLASHLIGHT WITH 2-WAY SWITCH

BRIGHTSTAR FLASHLIGHT ACCESSORIES

WANDS
23853 Red Wand
23860 Yellow Wand

STOCK CODE	BRIEF DESCRIPTION
LPHL-KBS-XWAND-01	BRIGHTSTAR, 23860, SP052 SNAP IN WAND, 6 1/2", YELLOW
LPHL-KBS-XWAND-05	BRIGHTSTAR, 23853, SP051 SNAP IN WAND, 6 1/2", RED

LIFERAFT ACCESORIES

DATREX EMERGENCY FOOD RATIONS AND DRINKING WATER

Water
- DX 1000W
- Purified water for immediate use
- Superior package material / durable
- Easy to dispense
- 5 year shelf life
- 125ml (4.227oz.) / sachet
- 64 sachets / case
- 8 liters / case
- USCG approved to SOLAS
- BV-SOLAS certified
- CA-TC approved
- 20.5lbs. per case (9.5kg)

FOOD
- 5 year shelf life
- 10,000 kj
- 2,400 kcal / package
- 500g
- USCG approved to SOLAS
- BV-SOLAS Certified
- CA-TC approved
- 30 packs per case
- 30.5 lbs per case (13.8kg)

STOCK CODE	BRIEF DESCRIPTION
LRAC-DTX-WATER	DRINKING WATER (96 SATCHETS/CARTON), 5 YEARS SHELF-LIFE 125ML/SACHET
LRAC-DTX-FOOD	FOOD RATIONS (30 PKT/CARTON) 5 YEARS SHELF-LIFE, 2,400 KCAL/PKT 10,000KJ

For more information or order,
please contact our Sales Team at
Tel: **(65) 6266-0788** or E-mail: **sales@noah.com.sg**

LIFERAFT ACCESSORIES

STOCK CODE	BRIEF DESCRIPTION
RAFT-GEN-YEMPK-01	BAILER FOR LIFERAFT
RAFT-GEN-YEMPK-02	RESCUE QUOIT
RAFT-GEN-YEMPK-03	CAN OPENER
RAFT-GEN-YEMPK-04	PADDLE FOR LIFERAFT
RAFT-GEN-YEMPK-06	FISHING KIT
RAFT-GEN-YEMPK-11	FLOATING KNIFE, FOR LIFERAFT
RAFT-GEN-YEMPK-12	SURVIVAL MANUAL FOR LIFERAFT
RAFT-GEN-YEMPK-18	HELIOGRAPH DAYLIGHT SIGNAL
RAFT-GEN-YEMPK-22	RADAR REFLECTOR FOR LIFERAFT
RAFT-GEN-YEMPK-23	SPONGE
RAFT-GEN-YEMPK-26	LIFERAFT SEA ANCHOR
RAFT-GEN-YEMPK-27	LIFERAFT REPAIR KIT
RAFT-GEN-YBODY-04	ID CONTAINER WITH CARD
RAFT-GEN-YEMPK-28	THERMAL AID
RAFT-GEN-YEMPK-29	FOOT BELLOW

LIFESAVING EQUIPMENT

COSALT

COSALT PERSONNEL RECOVERY DEVICE

A MOB Man overboard retrieval device, ergonomically designed to assist in the retrieval of conscious and unconscious casualties from the water. Retrieval can be made horizontally without risking further injury to the casualty, or to the rescuer.

Available in a variety of sizes, each CPRD is tailored to suit the individual needs of theapplication it will be used from.

The CPRD is constructed from high density plastic rungs and steel rods, and is fitted with Marine Grade 316 stainless steel snap hooks. Lifting strops and heaving lines are attached to aid with retrieval.

The FRC Kit comes in two sizes and is designed for use on Fast Rescue Craft. The kit is supplied in a robust high-viz valise and is compact enough to be stowed in the craft. The CPRD FRC Kit comes complete with hypolon patch fixing kits to attach it to either side of the craft.

The CPRD is available in a Rescue Stretcher configuration, for use with block and tackle or davit arrangements. The Rescue Stretcher can be used in conjunction with a rescue swimmer and is also available in two sizes.

Larger sizes of the CPRD can be used as a scramble net on the side of a vessel and in rescue zones. The CPRD can also be used for other applications where casualties are in a position to recover themselves from the water such as canal locks and dock walls.

The CPRD system is suitable for use by Tug Boat operators, Standby vessels Cruise and Ferry operators, MOD establishments, and Coastguard and Rescue organisations, along with many of other applications. The servicing regime for the CPRD is every three years. This facility is available throughout the Cosalt International network.

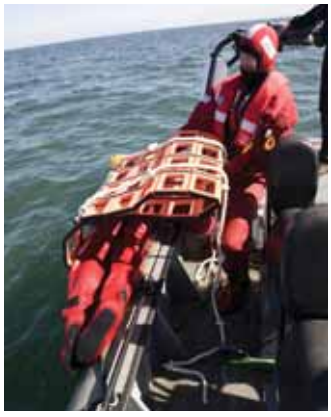

NOAH

For more information or order,
please contact our Sales Team at
Tel: **(65) 6266-0788** or E-mail: **sales@noah.com.sg**

COSALT PERSONAL RECOVERY DEVICE (CPRD) RESCUE BOAT KIT

STOCK CODE	BRIEF DESCRIPTION
LSEQ-COS-F0314	SEPRD314FRC For Boat Length < 5M Hauling Strop 2 Snap Hooks & Patches. (Please confirm on the Patches Material when ordering : Hypalon or PVC depending on the Boat‘s Material.)
LSEQ-COS-F0415	SEPRD415FRC For Boat Length > 5M Hauling Strop 2 Snap Hooks and 2 Hauling Lines. (Please confirm on the Patches Material when ordering : Hypalon or PVC depending on the Boat‘s Material.)

PERSONAL RECOVERY DEVICE (PRD)

STOCK CODE	BRIEF DESCRIPTION
LSEQ-COS-D0628	SEPRD628 , CPRD 06 x 28 RUNG Width: 1M, Freeboard: 2.5M Hauling Strop 2 Snap Hooks and 2 Hauling Lines
LSEQ-COS-D1228	SEPRD1228 , CPRD 12 x 28 RUNG Width: 1M, Freeboard: 2.5M Hauling Strop 3 Snap Hooks and 2 Hauling Lines
LSEQ-COS-D1236	SEPRD1236 , CPRD 06 x 36 RUNG Width: 2M, Freeboard: 3.5M Hauling Strop 3 Snap Hooks and 2 Hauling Lines
LSEQ-COS-D1244	SEPRD1244 , CPRD 12 x 44 RUNG Width: 2M, Freeboard: 4.5M Hauling Strop 3 Snap Hooks and 2 Hauling Lines

Note: other sizes are available, contact our sales personnel for more options.

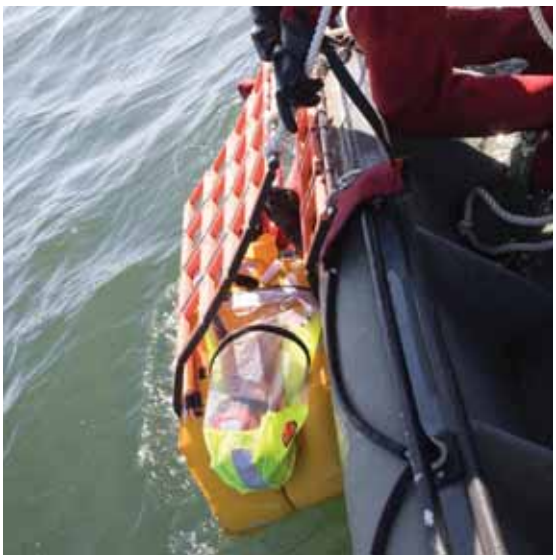

For more information or order,
please contact our Sales Team at
Tel: **(65) 6266-0788** or E-mail: **sales@noah.com.sg**

COSALT STRETCHER KITS

STOCK CODE	BRIEF DESCRIPTION
LSEQ-COS-S0908	SEPRDSK98, 09 x 08 STRETCHER KIT MORS stretcher consist of:- Complete 9 x 8 PRD, Floatation Tubes, 3 Legged Webbing Strops and Cover
LSEQ-COS-S1110	SEPRDSK1110, 11 x 10 STRETCHER KIT MORS stretcher consist of:- Complete 11 x 10 PRD, Floatation Tubes, 3 Legged Webbing Strops and Cover

JUNKIN

JSA-300

Lightweight Basket Type Stretcher JSA-300
JUNKIN pioneered the development of the Splint Type-Basket Stretcher which led to the outstanding Series 300 Stretchers, the most efficient and practical products of their kind on the market. Made of steel, all welded rigid construction which does not rely on injured person to attain form or rigidity. Light in weight and ample in size.

Nylon web straps at chest, abdomen, thigh, and calf.
Adjustable footrests for vertical lifting.
Frame is 5/8“ steel tubing; cross braces and
runners 3/16“ x 3/4“ flat steel.
Basket is 18 gauge, 1“ hexagon mesh netting.
DIMENSIONS: 80-1/2“ L; 8“ H

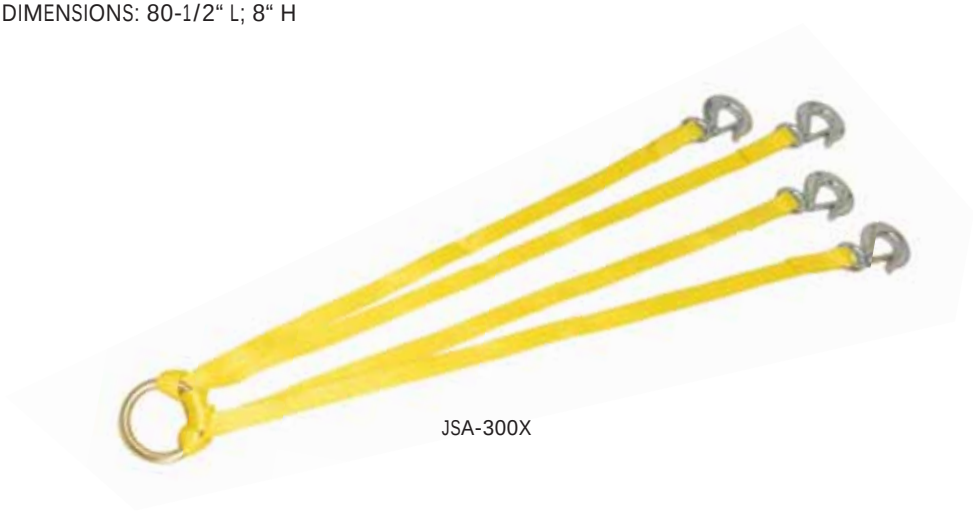

JSA-300X

Stretcher Bridle Sling JSA-300-X
The JSA-300-X Stretcher Bridle Sling provides horizontal or vertical lifting capacity of up to 2,000 lbs. Made of 1“ nylon webbing resistant to moisture and fungus rot with forged snap hooks and 3“ ID forged steel suspension ring.

CARTON SIZE: 83“ x 24“ x 8“
WEIGHT: 31 lbs.
LOAD CAPACITY: 1500 lbs.

NOAH
For more information or order,
please contact our Sales Team at
Tel: **(65) 6266-0788** or E-mail: **sales@noah.com.sg**

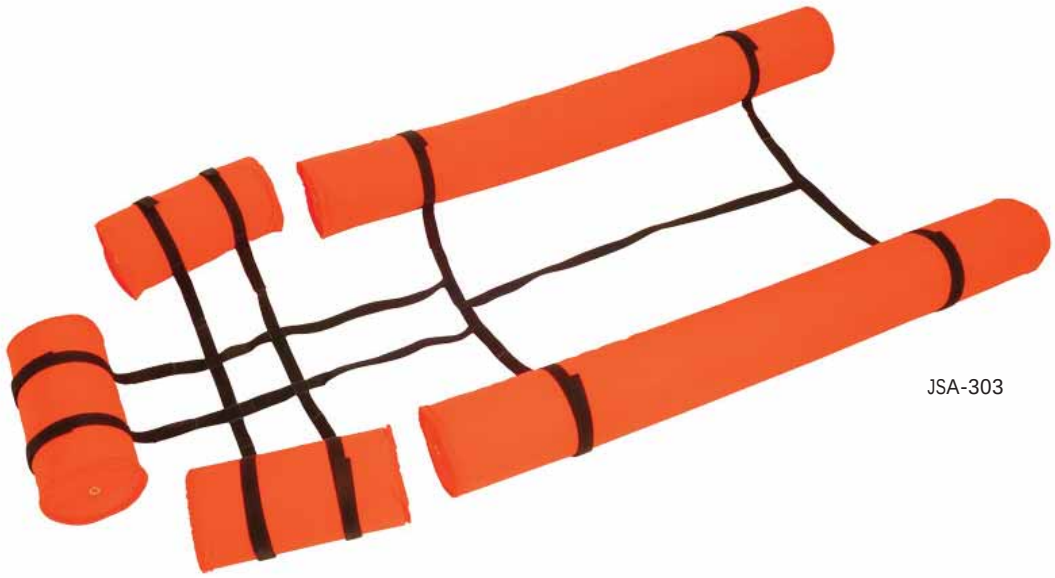

JSA-303

Flotation Stretcher Collar JSA-303
For use with all Junkin JSA-300 series Splint Stretchers to provide flotation during patient handling in water. Easily attached with hook and loop type fasteners to any Stokes type stretcher. Flotation bats are Dow Etha Foam® and covered in orange colored nylon.

WEIGHT: 3 lbs.

JSA-200

Junkin Plastic Stretcher JSA-200
Yellow high-density polyethylene shell, supported by a stainless steel outer rail, permanently attached with stainless steel semi-tubular rivets. Features molded runners, fully exposed outer rail, non-absorbent foam pad secured to stretcher and four patient restraint straps. Ideal for unusually rugged rescue situations such as industrial, mining or construction. Patent Pending.

Dimensions: 84-1/2“ L x 24“ W x 7-1/2“ H
WEIGHT: 31 lbs.
LOAD CAPACITY: 1200 lbs.

STOCK CODE	BRIEF DESCRIPTION
LSEQ-JKN-STCH1	JSA-300 "JUNKIN" WIRE Basket Stretcher
LSEQ-JKN-STCH1-01	JSA-300X "JUNKIN" 4-Point Lifting Nylon Bridle
LSEQ-JKN-STCH1-02	JSA-303 "JUNKIN" FLOTATION COLLAR FOR JUNKIN STRETCHERS
LSEQ-JKN-STCH2	JSA-200 "JUNKIN" PLASTIC BASKET STRETCHER

NEIL ROBERSTON STRETCHER

The Neil Robertson stretcher wraps around the casualty, providing protection without bulk. It is thus an excellent stretcher for use in confined spaces or where egress is difficult.

1. Main function and application
This product applies to all kinds of ships, field working, mine operation and architecture industries.

2. Standard
In accordance with the requirement of Neil-Robertson stretcher of WHO “International Marine Medical Guide“

3. Type and main technical reference

Horizontal Safety Load	Vertical Safety Load
120kg	120kg

STOCK CODE	BRIEF DESCRIPTION
LSEQ-CHN-STCH1	NEIL ROBERTSON STRETCHER

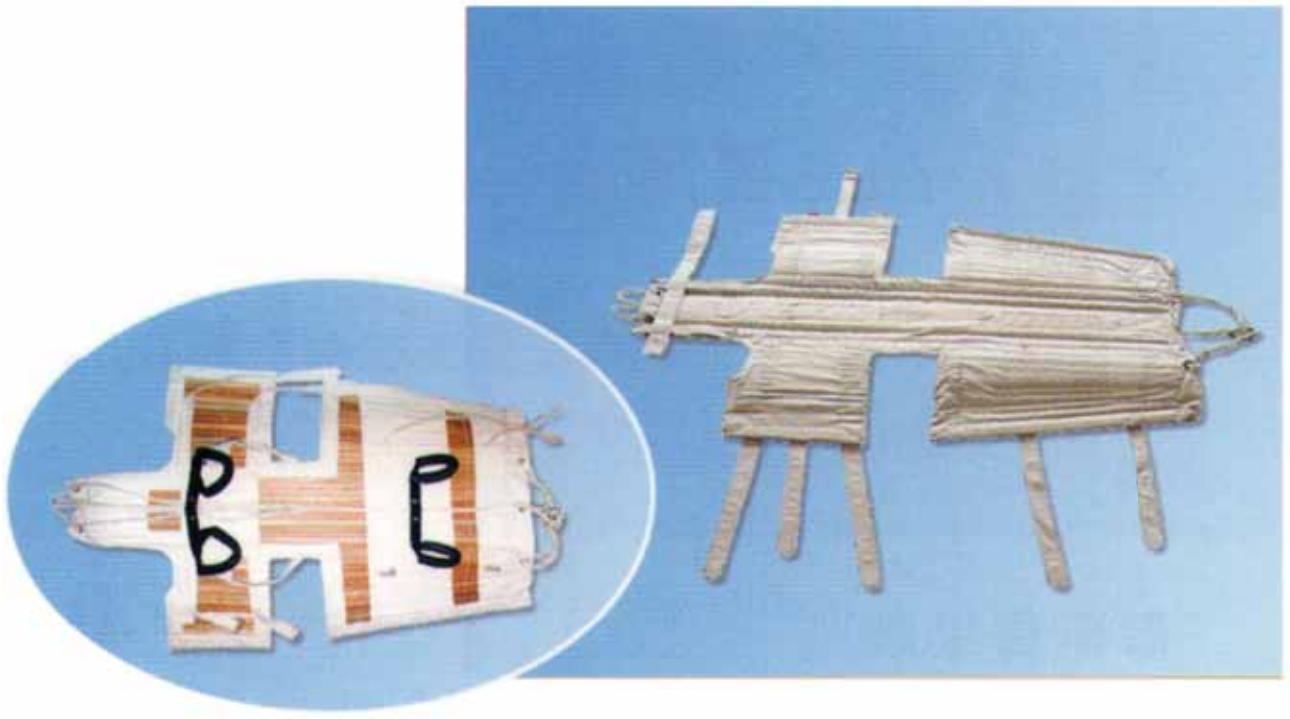

NOAH
For more information or order,
please contact our Sales Team at
Tel: **(65) 6266-0788** or E-mail: **sales@noah.com.sg**

"RES-Q-MATE" Stretcher

Res-Q-Mate Rescue Stretcher is specifically designed for use in building collapses, mine rescue, helicopter and confined space rescue.

Constructed of quality synthetic materials and stainless steel, the Res-Q-Mate is impervious to oil, water, grease and other petroleum products making it resistant to rot and corrosion. Torso and leg flaps comfortably wrap around the patient while four adjustable colour coded chest, thigh and lower legs straps secure the patient.

An additional green v-shaped restraint is designed to secure the arms while a long black foot end restraint is designed to secure the feet via a figure-of-eight configuration. There are six built-in carry handles that provide many options for handling the Ferno Res-Q-Mate Rescue Stretcher and patient.

Res-Q-Mate Rescue Stretcher folds compactly and stores neatly inside a heavy duty reflective backpack that is supplied as standard with each unit. Each Res-Q-Mate Rescue Stretcher comes complete with a four-point lifting bridle, 50 m tag line system, adjustable head restraint, head pillow and reflective backpack.

"PARAGUARD" Stretcher

The Paraguard Excel Rescue Stretcher

- Designed for rescuing casualties from building collapse, industrial incidents or confined spaces.
- Constructed from synthetic materials, stainless steel and aluminium, the Excel is impervious to oil, water and petroleum products and is resistant to rot and corrosion.
- Particularly useful for helicopter and building rescues.
- The Paraguard Excel is simple to use with straps to secure the chest, arms, thighs and ankles. Head is held in place by a 3 point, non-slip forehead strap. A figure-8 strap supports the feet. To enhance infection control the flaps are wipe clean and the patient pads may be detached from the base for washing.
- DIMENSIONS: Weight: 14kg - DIMENSIONS: 100x32x21cm - Max Load: 136kg

RES-Q-MATE & PARAGUARD

STOCK CODE	BRIEF DESCRIPTION
LSEQ-LCL-STCH2	"RES-Q-MATE" Stretcher, c/w: 4-point Lifting Sling
LSEQ-LCL-STCH3	"PARAGUARD" Stretcher, c/w: 4-point Lifting Sling

SEARCHLIGHTS

1931.3

ACR RCL-100D
200,000 CD REMOTE-CONTROLLED SEARCHLIGHT (12/24V)

The RCL-100's rugged marine-grade aluminum housing is equally at home on medium-size sport yachts/sport fish and commercial vessels. Salt water-resistant design includes triple-primed and sealed constuction, nylon and phenolic washers, and aluminized stainless steel screws with insulating lubricant.

- Twin hihg-intensity 55-watt Halogen bulbs
- Internal elevation mechanism for precise pitch control of beam; protects elevation mechanism from weather
- Fingertip remote control Point Pad™ (up to three remote units may be installed)
- Surface/flush mount options included

1941

ACR RCL-600D
6 MILLION CD REMOTE-CONTROLLED SEARCHLIGHT (24V)

At 6 million candela, the top-of-the-line RCL-600A pierces the darkest night. Its high-intensity 150-watt Xenon bulb and parabolic reflector provides brawny power for commercial vessels, yet its aesthetic design meets all the requirements of large pleasure yachts. Switch easily from flood to spot, and maneuver with the self-contained remote joystick.

- Internal elevation mechanism for precise pitch control of beam
- Elevation Speed: 7.5° per second, Turning Speed: 11° per second low, 27° per second high
- Auto return brings light back to a pre-set position
- Nylon shoulder washers at base eliminate galvanic reaction
- Marine-grade aluminum enclosure for years of reliable, weatherproof service

NOAH

For more information or order,
please contact our Sales Team at
Tel: **(65) 6266-0788** or E-mail: **sales@noah.com.sg**

1933

ACR RCL-300A

1 MILLION CD REMOTE-CONTROLLED SEARCHLIGHT (12/24V)

Twin, 35-watt, Metal Halide HID lamps create a narrow-beam searchlight perfect for large sport yachts, mega-yachts, large sport fish and commercial vessels. It's gasketed and finished to stand up to the marine environment, and all functions can be operated using the supplied Point Pad™ and Master Controller (up to thre remote controllers may be installed).

- Internal elevation mechanism for precise pitch control of beam
- Auto return brings light back to a pre-set position
- Rugged, triple-primed and sealed, marine-grade aluminum housing
- Housing rotates a full 360° for all-around illumination

STOCK CODE	BRIEF DESCRIPTION
LSLT-ACR-RC01B	ACR, RCL-100D, 1931.3, SEARCHLIGHT, 24VDC
LSLT-ACR-RC02B	ACR, RCL-600A, 1941, SEARCHLIGHT, 24VDC
LSLT-ACR-RC03B	ACR, RCL-300A, 1933, SEARCHLIGHT, 24VDC

The design of IMAX Searchlights is based on many years of experience and extensive research in the field of professional Marine lighting. Carefully selected materials are used to ensure maximum performance, low maintenance and a long troublefree life. The perfect combination of mirror/reflector and lightsource is determined through advanced computermodels.

Instead of aluminium reflectors, often used in conventional searchlights, IMAX uses brilliant mirror/reflectors, heat resistant, made of superclear glass to achieve the maximum reflectivity of 92%!! A clever ringfilter prevents glare and straylight. Every part of the IMAX Searchlight is of course protected against the environmental circumstances at sea. IMAX mirror/reflectors maintain their superior brilliance during many years.

Mounting the IMAX Searchlight is easy. The length of the controlmechanism can be cut-to-size during installation, saving time and money.

IM290C

IM345C

IM490C

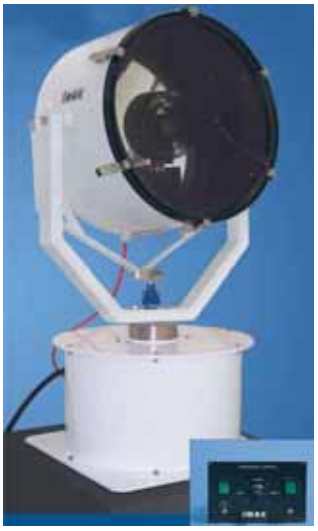
IM490RC

IMAX SERIES

STOCK CODE	BRIEF DESCRIPTION
PICK-IMX-IC10	IMAX , 10" CABIN CONTROL SEARCHLIGHT IM290C, C/W: - CONTROL LEVER & ROD - 01PCE 650W / 24V HALOGEN BULB
PICK-IMX-IC14	IMAX, 12" CABIN CONTROL SEARCHLIGHT IM345C, C/W: - CONTROL LEVER & ROD - 01PCE 1000W / 110 OR 220V HALOGEN BULB
PICK-IMX-IC19	IMAX, 19" CABIN CONTROL SEARCHLIGHT IM490C, C/W: - CONTROL LEVER & ROD - 01PCE 2000W / 220V HALOGEN BULB
LSLT-IMX-ZZZ	IMAX, 19" REMOTE CONTROL SEARCHLIGHT IM490RC, C/W: - JOYSTICK CONTROL PANEL - 01PCE 2000W / 220V HALOGEN BULB

For more information or order,
please contact our Sales Team at
Tel: **(65) 6266-0788** or E-mail: **sales@noah.com.sg**

IMAX Diagrams

DIMENSIONS

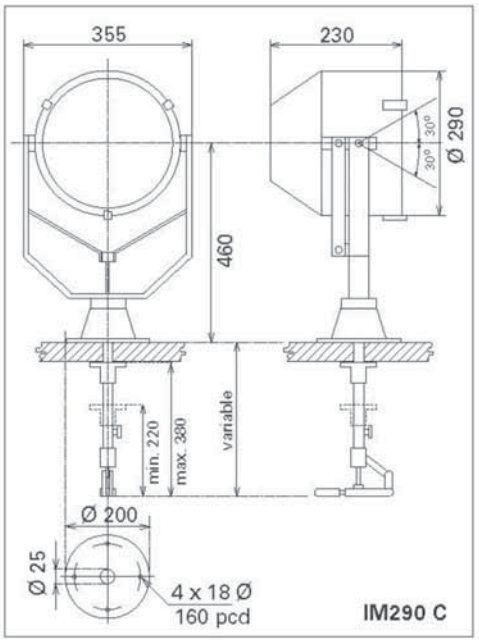

DIMENSIONS

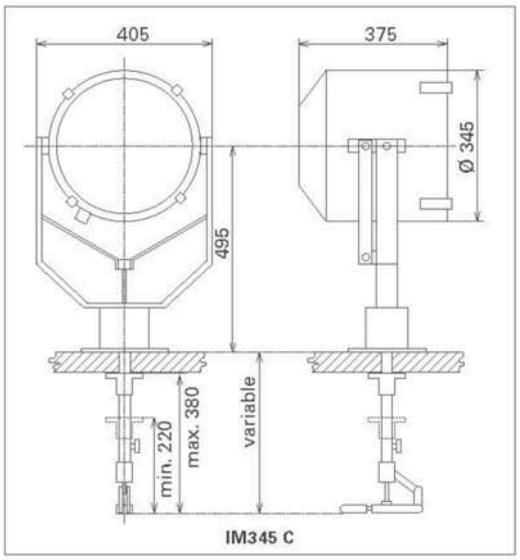

DIMENSIONS *all dimensions in mm.*

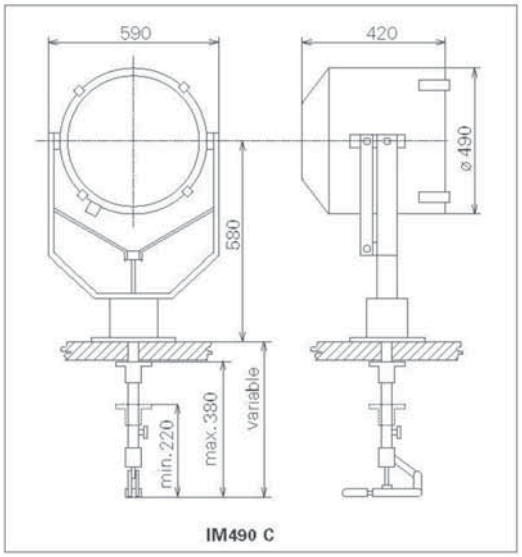

DIMENSIONS *all dimensions in mm.*

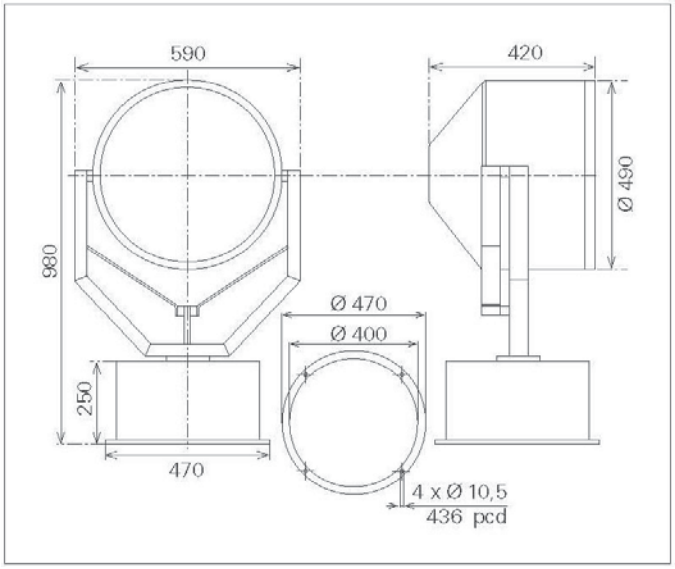

MOTOR UNIT SPECIFICATIONS

Pan movement:	350°
Tilt movement:	+30° to -30°
Pan speed:	12°/sec
Tilt speed:	2.4°/sec
Operating temp.:	-30° C to +70° C
Standard:	Thermocontrolled heater

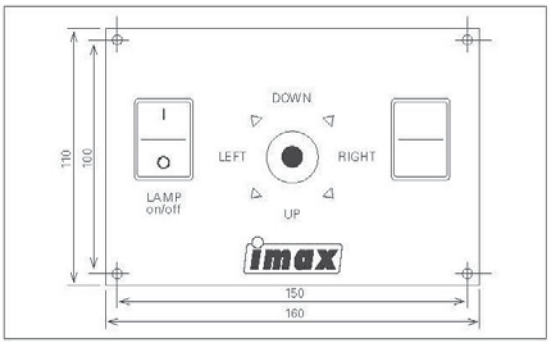

MA330C

MA330RC

Designed for professional offshore use, made in non-corrosive materials.

Available in direct manual control, underdeck manual control and electrical remote control with double speed pan control (optional).

Finished in white powder coating for a long trouble-free life. It opens at the back for easy access to lamp and reflector. Knob at the back of the searchlight for external focus control.

Maximum efficiency through axially fitted halogen lightsource. Maximum performance through its deep, short focus copper/chrome reflector, providing maximum lightoutput.

MAXI SERIES

STOCK CODE	BRIEF DESCRIPTION
PICK-IMX-MC12	IMAX, 12" CABIN CONTROL SEARCHLIGHT MA330C, C/W: - CONTROL LEVER & ROD - 01PCE 1000W / 110 OR 220V HALOGEN BULB
LSLT-IMX-MD12	IMAX, 12" DECK CONTROL SEARCHLIGHT MA330D, C/W: - 01PCE 1000W / 110 OR 220V HALOGEN BULB
LSLT-IMX-MR12	IMAX, 12" REMOTE CONTROL SEARCHLIGHT MA330RC, C/W: - JOYSTICK CONTROL PANEL - 01PCE 1000W / 220V HALOGEN BULB

SPARE BULB

STOCK CODE	BRIEF DESCRIPTION
LSLT-IMX-XBBHD-01	650W / 230VAC HALOGEN BULB FOR 10" S/L, T12
LSLT-IMX-XBBHD-02	1KW / 230VAC HALOGEN BULB FOR 12" S/L, T11
LSLT-IMX-XBBHC-02	1KW / 120VAC HALOGEN BULB FOR 12" S/L, T11
LSLT-IMX-BBHC-02	2KW / 230VAC HALOGEN BULB FOR 12" S/L
LSLT-IMX-BBHC-02	2KW / 120VAC HALOGEN BULB FOR 12" S/L

S/S ROD for CABIN CONTROL Searchlight

STOCK CODE	BRIEF DESCRIPTION
LSLT-IMX-XSR06	STAINLESS STEEL ROD FOR CABIN CTRL S/L, 6M 304

For more information or order,
please contact our Sales Team at
Tel: **(65) 6266-0788** or E-mail: **sales@noah.com.sg**

MAXI Diagrams

DIMENSIONS

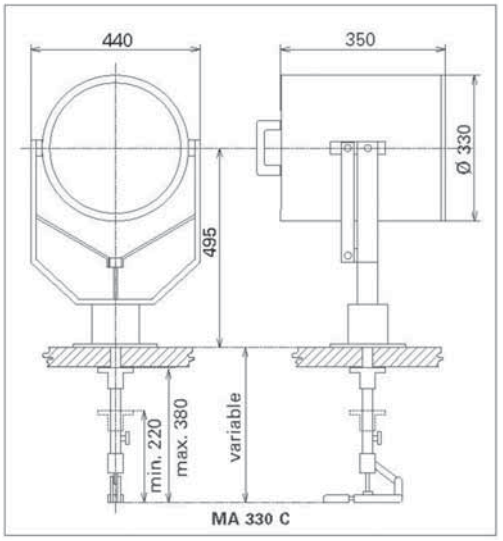

DIMENSIONS *all dimensions in mm.*

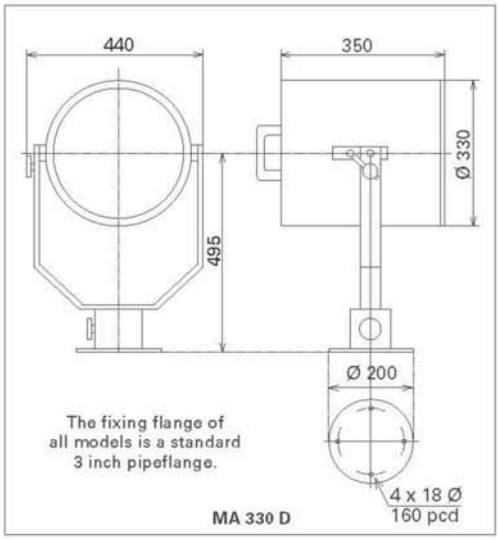

DIMENSIONS *all dimensions in mm.*

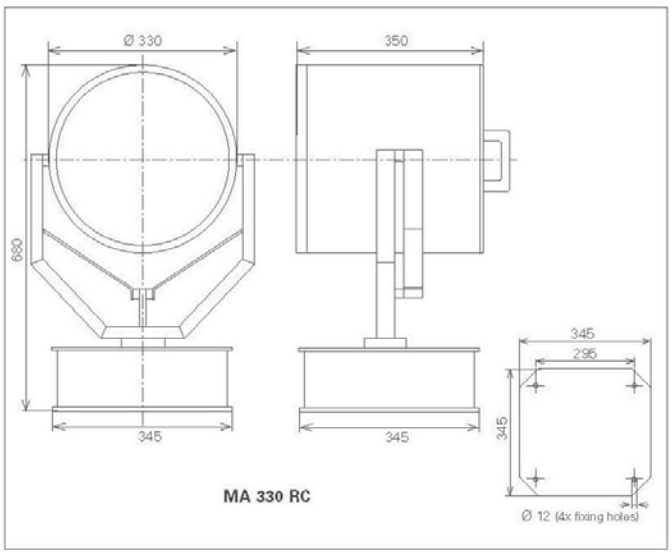

MOTOR UNIT SPECIFICATIONS

Pan movement:	350°
Tilt movement:	+30° to -30°
Pan speed:	6°/sec <X<30°/sec
Tilt speed:	1,2 mm/sec
Operating temp.:	-30° C to +70° C
Standard:	Thermocontrolled heater 75 W
Supply voltage:	220/230 V / 50-60 Hz or 24 V dc

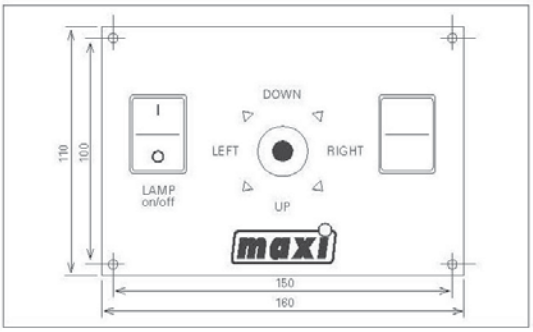

MARINE OBM

TOHATSU MARINE OUTBOARD MOTOR

STOCK CODE	BRIEF DESCRIPTION
MOBM-LCL-025ML	"TOHATSU" M25C3L OBM, 25HP, MANUAL, 2-STROKE, LONG SHAFT
MOBM-LCL-040ML	"TOHATSU" M40CL OBM, 40HP, MANUAL, 2-STROKE, LONG SHAFT

For more information or order,
please contact our Sales Team at
Tel: **(65) 6266-0788** or E-mail: **sales@noah.com.sg**

Tohatsu 2-Stroke Benefits:
- Excellent reliability with proven 2-stroke technology
- Simple in design

Easy Operation and Handling:
- Loop charged induction for smooth operation and fuel economy
- CD ignition system for quicker starts
- Remote control **

** Remote control models

Fundamentals for User Convenience:
- Through-the-prop exhaust for a quiet ride
- Thermostatically controlled cooling system for consistent engine temperature
- Stainless steel water pump housing for outstanding durability
- High grade marine aluminum alloy that provides the ultimate protection against corrosion
- Zinc coating on internal water passages for superior corrosion resistance
- Aluminum propeller

Protection:
- Safety lanyard (an essential protection feature standard on all Tohatsu outboards)
- Start-in-gear protection for safer engine starting

PYROTECHNIC - DISTRESS SIGNALS

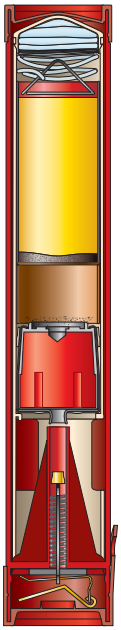

Hansson PyroTech · IKAROS Parachute Rockets (Red)

The IKAROS parachute rocket was introduced in 1959 and its design is now used by most manufacturers around the world. IKAROS is the leading parachute rocket on the market with a quality and performance that meets the highest demands for functionality and safe operation. It is approved globally and conforms to the latest SOLAS 74/96 regulations.

Design and function
A launching tube with clear instructions and a non-slip surface ensures safe operation even when launched with one hand. The IKAROS parachute rocket is waterproof and can be held under water in the ready-to-fire position.

Applications
For long range distress signalling on ships, lifeboats and life rafts. The best signal for use in offshore kits for pleasure crafts.

Specifications

Flare ejection height:	350 m
Light intensity:	30,000 cd
Burning time:	> 40 s
Dimensions:	277x47 mm
Weight:	345 g
Ref. No.:	34 01 00

Also available: **IKAROS two-star red rocket**

STOCK CODE	BRIEF DESCRIPTION
PYRO-HSN-PR	IKAROS, 340100 PARACHUTE ROCKET, RED
PYRO-HSN-2STAR	IKAROS, 340700 2-STAR ROCKET, RED

For more information or order,
please contact our Sales Team at
Tel: **(65) 6266-0788** or E-mail: **sales@noah.com.sg**

Hansson PyroTech · IKAROS Handheld Flares

IKAROS handheld flares are designed to give maximum output for a minimum size. The flare compositions are developed from the IKAROS parachute flare, which is known to be the best in the world. IKAROS handheld flares are approved globally and meet the latest SOLAS 74/96 regulations.

Design and function
The case is made of corrosion-resistant steel and carries clear and simple instructions for use.

Applications
IKAROS handheld flare, red
For short range distress signalling on ships, lifeboats and life rafts. Also the best pinpoint signal for pleasure craft.

IKAROS handheld flare, white
A warn-off signal for use by vessels and pleasure craft.

Specifications

Red		White	
Light intensity:	15,000 cd	Light intensity:	10,000 cd
Burning time:	> 60 s	Burning time:	> 60 s
Dimensions:	243x30 mm	Dimensions:	243x30 mm
Weight:	235 g	Weight:	235 g
Ref. No.:	34 15 00	Ref. No.:	34 16 00

STOCK CODE	BRIEF DESCRIPTION
PYRO-HSN-RHF	IKAROS, 341500 RED HANDFLARES, MK4
PYRO-HSN-WHF	IKAROS, 341600 WHITE HANDFLARES, MK4

Hansson PyroTech · IKAROS Buoyant Smoke Signal
(Orange, 3min)

The IKAROS Buoyant Smoke Signal is approved globally and meets the latest SOLAS 74/96 regulations.

Design and function
The case is made of corrosion-resistant steel and carries clear and simple instructions.

Applications
For daylight distress signalling on ships, lifeboats and life rafts.

Specifications

Smoke duration time:	3 min
Dimensions:	95x101 mm
Weight:	510 g
Ref. No.:	34 21 30

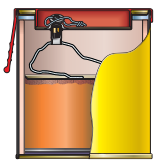

STOCK CODE	BRIEF DESCRIPTION
PYRO-HSN-OSS03	IKAROS, 342130 ORANGE SMOKE SIGNAL, 3-MINS

DIRECTIONS FOR USE

IKAROS Parachute Rocket

Remove bottom lid.

Trigger falls down.

Squeeze trigger against outer casing.

* The rocket is waterproof.

IKAROS Handheld Flare

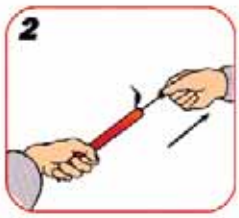

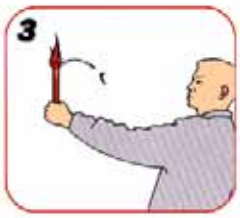

Hold the flare in your hand.

IKAROS Buoyant Smoke

Remove the lid.

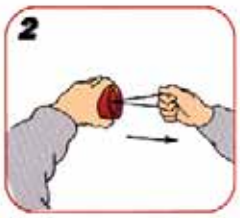

Pull the loop.

Throw the signal into the water.

NOAH

For more information or order,
please contact our Sales Team at
Tel: **(65) 6266-0788** or E-mail: **sales@noah.com.sg**

Hansson PyroTech · IKAROS Man-Overboard Light & Smoke

The IKAROS Man-overboard (MOB) signal is approved globally and meets the latest SOLAS 74/96 regulations.

Design and function
A combined day and night marker (giving 2 hours light and 15 minutes smoke) with lithium battery sealed for life. Maximum storage height is 45 m.

Applications
For use as a man-overboard marker, designed for mounting on the ship's bridge together with lifebuoy.

Specifications

MOB Mk III light & smoke		MOB Mk III smoke marker	
Performance:	Light 2 cd > 2 hours	Smoke duration time:	> 15 min
Smoke duration time :	> 15 min	Dimensions:	200x500 mm
Dimensions:	200x500 mm	Weight:	4.7 kg
Weight:	4.8 kg	Ref. No.:	34 52 05
Ref. No.:	34 51 05		

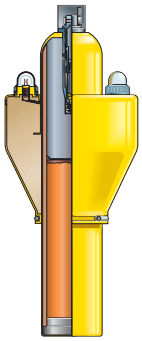

STOCK CODE	BRIEF DESCRIPTION
PYRO-HSN-MOB	IKAROS, 345105 MANOVERBOARD (SELF-IGNITING SMOKE AND LIGHT FOR LIFEBUOY)
PYRO-HSN-OSS15	IKAROS, 345205 ORANGE SMOKE SIGNAL, 15-MINS (SELF-IGNITING SMOKE ONLY FOR LIFEBUOY)

Directions For Use

Method 1

Remove lifebuoy.

Throw lifebuoy overboard.

Method 2

Pull out lock pin.

Lifebuoy pulls the signal with it.

Hansson PyroTech · IKAROS Line-Thrower

IKAROS Line-Thrower is approved globally and meets the latest SOLAS 74/96 regulations.

Design and function
The Ikaros Line-Thrower is a robust device consisting of a waterproof plastic container with integral handle and trigger mechanism, a solid fuel rocket and 300m of line.

Applications
For casting a pilot line for cables and ropes in rescue operations at sea. Can be used between ships, from shore to ship or ship to shore, or for rescuing personnel.

Specifications

Performance:	Throws a line 300 m in calm wind
Length of line:	300 m
Line diameter:	4 mm
Line strength:	2 kN
Dimensions:	340x230 mm
Weight:	4 kg
Ref. No.:	34 61 00 Complete Line-thrower
Ref. No.:	34 62 00 Replacement rocket
Ref. No.:	34 63 00 Buoyant head

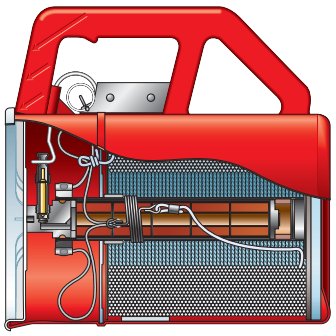

STOCK CODE	BRIEF DESCRIPTION
PYRO-HSN-LTA	IKAROS, 346100 LINE THROWERS
PYRO-HSN-LTA-01	IKAROS, 346200 SPARE ROCKET FOR LINE THROWERS
PYRO-HSN-LTA-03	IKAROS, 690000 CONTAINER WITH LINE FOR LINE THROWERS
PYRO-HSN-LTA-04	IKAROS, 346300 BUOYANT HEAD FOR LINE THROWERS

Directions For Use

Remove safety pin.

Keep arrows on the Line thrower parallel to the deck/ground. Press the Line thrower against your thigh.

Pull trigger.

The line is secured to the inside of the container by a quick release knot. A buoyant head is also available for attachment to the front end of the rocket. As the rocket has integral ignition, only one item needs replacing after the statutory expiry date.

NOAH
For more information or order,
please contact our Sales Team at
Tel: **(65) 6266-0788** or E-mail: **sales@noah.com.sg**

Hansson PyroTech · IKAROS Lifeboat Set

The IKAROS lifeboat set consist of:
2 IKAROS Buoyant Smoke Signals (Orange, 3min)
4 IKAROS Parachute Rockets (Red)
6 IKAROS Handheld Flares (Red)
1 IKAROS Pyro Container

STOCK CODE	BRIEF DESCRIPTION
PYRO-HSN-OSS03	IKAROS, 342130 2 ORANGE SMOKE SIGNAL, 3-MINS
PYRO-HSN-PR	IKAROS, 340100 4 PARACHUTE ROCKET, RED
PYRO-HSN-RHF	IKAROS, 341500 6 RED HANDFLARES, MK4
PYRO-LCL-XPBX	IKAROS 1 PYRO CONTAINER

Hansson PyroTech · IKAROS Bridge Set

The IKAROS bridge set consist of:
12 IKAROS Parachute Rockets (Red)
1 IKAROS Pyro Container

STOCK CODE	BRIEF DESCRIPTION
PYRO-HSN-PR	IKAROS, 340100 12 PARACHUTE ROCKET, RED
PYRO-LCL-XPBX	IKAROS 1 PYRO CONTAINER

宁波振华公司
Ningbo Zhenhua Co.,ltd

Characteristics: This product complies with relevant requirements of SOLAS 74/96 LSA stipulation and it is MSC.218(82) amendment and MSC.218(70) lifesaving equipment standards . It is accredited by CE certificate issued by Germanischer Llyod AG, approved by China Classification Society (CCS) and the Register of shipping of the People's Republic of China.

STOCK CODE	BRIEF DESCRIPTION
PYRO-CHN-PR	ZHENHUA PARACHUTE ROCKET, RED
PYRO-CHN-RHF	ZHENHUA RED HANDFLARES
PYRO-CHN-OSS03	ZHENHUA ORANGE SMOKE SIGNAL, 3 MINS
PYRO-CHN-MOB	ZHENHUA MANOVERBOARD, LIGHT & 15-MINS SMOKE SIGNAL
PYRO-CHN-LTA	ZHENHUA LINE THROWERS APPARATUS, SELF-CONTAINED

Rocket Parachute Flare Signal

It is used for leading safe landing of ships and vessels, liferaft; offshore platform signaling and indicating position.

Main technical parameters:

1) Luminous color: Red
2) Luminous intensity: ≥ 15,000cd
3) Burning time: ≥60s
4) Ambient temperature for use and storage: -30˚C ~ +65˚C
5) Validity: 3 years.

Hand Flares

It is used for leading safe landing of ships and vessels, liferaft; offshore platform signaling and indicating position.

Main technical parameters:

1) Luminous color: Red
2) Luminous intensity: ≥ 15,000cd
3) Burning time: ≥60s
4) Ambient temperature for use and storage: -30˚C ~ +65˚C
5) Validity: 3 years.

NOAH
For more information or order,
please contact our Sales Team at
Tel: **(65) 6266-0788** or E-mail: **sales@noah.com.sg**

Buoyant Smoke Signals

It is used for leading safe landing of ships and vessels, liferaft; offshore platform signaling and indicating position.

Main technical parameters:

1) Luminous color: Red
2) Luminous intensity: ≥ 15,000cd
3) Burning time: ≥60s
4) Ambient temperature

Lifebuoy Self-igniting Lights and Self-Activating Smoke Signals

It is used to indicate the position of lifebuoy at sea at day and night.

Main technical parameters:

1) Luminous color: Orange
2) Burning time: ≥15min
3) Luminous intensity: ≥2cd
4) Duration of lighting: ≥2h
5) Ambient temperature for use and storage: -30˚C ~ +65˚C
6) Validity: 3 years.

Self-contained Line-throwing Unit

It is used for ships or peoples on off-shore platform to launch the line to the near or pass-by ships for the purpose of lifesaving under distress situation.

Main technical parameters:

1) Throwing distance (windless weather): ≥230m
2) Breaking force of the line: ≥2kN
3) Total length of the line: 270m
4) Ambient temperature for use and storage: -30˚C ~ +65˚C
5) Validity: 3 years

LIFERAFT & ACCESSORIES

CRV LIFERAFT THROWOVER TYPE

STOCK CODE	BRIEF DESCRIPTION
RAFT-CRV-06SST	"CRV" INFLATABLE LIFERAFT, CRVF-A, CAPACITY: 6MEN, CCS, C/W: A) LASHING, THROWOVER B) CRADLE, THROWOVER C) HYDROSTATIC RELEASE
RAFT-CRV-10SST	"CRV" INFLATABLE LIFERAFT, CRVF-A, CAPACITY: 10MEN, CCS, C/W: A) LASHING, THROWOVER B) CRADLE, THROWOVER C) HYDROSTATIC RELEASE
RAFT-CRV-15SST	"CRV" INFLATABLE LIFERAFT, CRVF-A, CAPACITY: 15MEN, CCS, C/W: A) LASHING, THROWOVER B) CRADLE, THROWOVER C) HYDROSTATIC RELEASE
RAFT-CRV-20SST	"CRV" INFLATABLE LIFERAFT, CRVF-A, CAPACITY: 20MEN, CCS, C/W: A) LASHING, THROWOVER B) CRADLE, THROWOVER C) HYDROSTATIC RELEASE
RAFT-CRV-25SST	"CRV" INFLATABLE LIFERAFT, CRVF-A, CAPACITY: 25MEN, CCS, C/W: A) LASHING, THROWOVER B) CRADLE, THROWOVER C) HYDROSTATIC RELEASE

SPARE CRADLES

STOCK CODE	BRIEF DESCRIPTION
RAFT-LCL-XCTO	CRADLE, THROWOVER TYPE
RRAFT-LCL-XCSL	CRADLE, SELF-LAUNCHING TYPE

For more information or order,
please contact our Sales Team at
Tel: **(65) 6266-0788** or E-mail: **sales@noah.com.sg**

Model	Capacity	Length	Width	Heigt	Weight	Container Size	Packing Size
HNF-A6	6	2446	2260	1250	90	600 x L1140	680 x 680 x 1250
HNF-A10	10	3300	2200	1250	114	620 x L1260	700 x 700 x 1370
HNF-A15	15	3540	3425	1700	150	660 x L1340	740 x 740 x 1440
HNF-A20	20	4600	3000	1450	174	700 x L1460	760 x 760 x 1640
HNF-A25	25	4300	4220	2200	185	700 x L1460	760 x 760 x 1640

HAINING LIFERAFT THROWOVER TYPE

STOCK CODE	BRIEF DESCRIPTION
RAFT-HN1-06SST	"HAI NING" INFLATABLE LIFERAFT, HNF-6, SOLAS 'A' PACK CAPACITY : 06 MEN, CCS, C/W: A) LASHING, THROWOVER B) CRADLE, THROWOVER C) HYDROSTATIC RELEASE
RAFT-HN1-10SST	"HAI NING" INFLATABLE LIFERAFT, HNF-10, SOLAS 'A' PACK CAPACITY : 10 MEN, CCS, C/W: A) LASHING, THROWOVER B) CRADLE, THROWOVER C) HYDROSTATIC RELEASE
RAFT-HN1-15SS	"HAI NING" INFLATABLE LIFERAFT, HNF-15, SOLAS 'A' PACK CAPACITY : 15 MEN, CCS, C/W: A) LASHING, THROWOVER B) CRADLE, THROWOVER C) HYDROSTATIC RELEASE
RAFT-HN1-20SST	"HAI NING" INFLATABLE LIFERAFT, HNF-20, SOLAS 'A' PACK CAPACITY : 20 MEN, CCS, C/W: A) LASHING, THROWOVER B) CRADLE, THROWOVER C) HYDROSTATIC RELEASE
RAFT-HN1-25SST	"HAI NING" INFLATABLE LIFERAFT, HNF-25, SOLAS 'A' PACK CAPACITY : 25 MEN, CCS, C/W: A) LASHING, THROWOVER B) CRADLE, THROWOVER C) HYDROSTATIC RELEASE

FUJIKURA COMPOSITES

FUJIKURA LIFERAFT THROWOVER TYPE

STOCK CODE	BRIEF DESCRIPTION
RAFT-FJK-06SST-A	FUJIKURA LIFERAFT, 6 MEN MODEL:FRN-SN-06, SOLAS, EC/MED TYPE APPROVED C/W A) LASHING, THROWOVER B) CRADLE, THROWOVER C) HYDROSTATIC RELEASE
RAFT-FJK-10SST-A	FUJIKURA LIFERAFT, 10 MEN MODEL:FRN-SN-10, SOLAS, EC/MED TYPE APPROVED C/W A) LASHING, THROWOVER B) CRADLE, THROWOVER C) HYDROSTATIC RELEASE
RAFT-FJK-15SST-A	FUJIKURA LIFERAFT, 15 MEN MODEL:FRN-SN-15, SOLAS, EC/MED TYPE APPROVED C/W A) LASHING, THROWOVER B) CRADLE, THROWOVER C) HYDROSTATIC RELEASE
RAFT-FJK-20SST-A	FUJIKURA LIFERAFT, 20 MEN MODEL:FRN-SN-20, SOLAS, EC/MED TYPE APPROVED C/W A) LASHING, THROWOVER B) CRADLE, THROWOVER C) HYDROSTATIC RELEASE
RAFT-FJK-25SST-A	FUJIKURA LIFERAFT, 25 MEN MODEL:FRN-SN-25, SOLAS, EC/MED TYPE APPROVED C/W A) LASHING, THROWOVER B) CRADLE, THROWOVER C) HYDROSTATIC RELEASE

6-15 PERSONS

25 PERSONS

SPARE CRADLES

STOCK CODE	BRIEF DESCRIPTION
RAFT-LCL-XCTO	CRADLE, THROWOVER TYPE
RRAFT-LCL-XCSL	CRADLE, SELF-LAUNCHING TYPE

NOAH

For more information or order,
please contact our Sales Team at
Tel: **(65) 6266-0788** or E-mail: **sales@noah.com.sg**

PARTICULARS

The main particulars and performance of the life raft are as shown in TABLE 1. TABLE 1

Item \ Type	FRN-SN-6	FRN-SN-10	FRN-SN-15	FRN-SN-20	FRN-SN-25
CAPACITY (persons)	6	10	15	20	25
OUTSIDE SIZE (m)	2.39	2.96	3.54	4.05	4.46
OVERALLHEIGHTWHEN CANOPY SPREAD (m)	1.40	1.44	1.50	1.80	1.90
FLOOR AREA(㎡)	2.29	3.77	5.63	7.56	9.37
No. OF SIDES	Regular Octagon				
TOTAL BUOYANCY (kgf)	1, 730	3, 110	5, 014	7, 050	9, 041
GAS CHARGE (kg)	1.50× 2 psc	2.50× 2 psc	3.50× 2 psc	4.17× 2 psc	5.00× 2 psc
Total body weight [inc.Gas cylinder]	36.8	47.6	57.1	71.3	79.2
TOTAL weight(kg)A-PACK	73.4	93.6	117.4	143.1	161.9
TOTAL weight(kg)B-PACK	57.4	68.4	80.3	95.7	104.1
TOTAL weight(kg) LIMITED INSHORE	60.7	73.6	85.8	103.6	117.0
TOTAL weight(kg)COASTAL	53.9	64.7	75.7	90.9	98.8
TOTAL weight(kg)NO WAVE	53.2	64.0	75.0	90.2	98.1
CONTAINER SIZE A-PACK (m)	φ 0.55× 1.07	φ 0.60× 1.10	φ 0.65× 1.20	φ 0.70× 1.20	φ 0.70× 1.20
CONTAINER SIZE B-PACK(m)	φ 0.50× 1.00	φ 0.50× 1.00	φ 0.55× 1.07	φ 0.60× 1.10	φ 0.60× 1.10
CONTAINER SIZE LIMITED INSHORE(m)	φ 0.55× 1.07	φ 0.55× 1.07	φ 0.55× 1.07	φ 0.60× 1.10	φ 0.65× 1.20
CONTAINER SIZE COASTAL/NO WAVE(m)	φ 0.50× 1.00	φ 0.50× 1.00	φ 0.50× 1.07	φ 0.60× 1.10	φ 0.60× 1.10
TYPE APPROVAL №.	No.4695	No.4696	No.4697	No.4698	No.4699

FUJIKURA LIFERAFT, DAVIT LAUNCH

STOCK CODE	BRIEF DESCRIPTION
RAFT-FJK-25SSD	FUJIKURA LIFERAFT 25 MEN,DAVIT LAUNCH, SOLAS,EC, 30M DROP HEIGHT

HAMMAR®
BETTER SOLUTIONS FOR SAFETY AT SEA

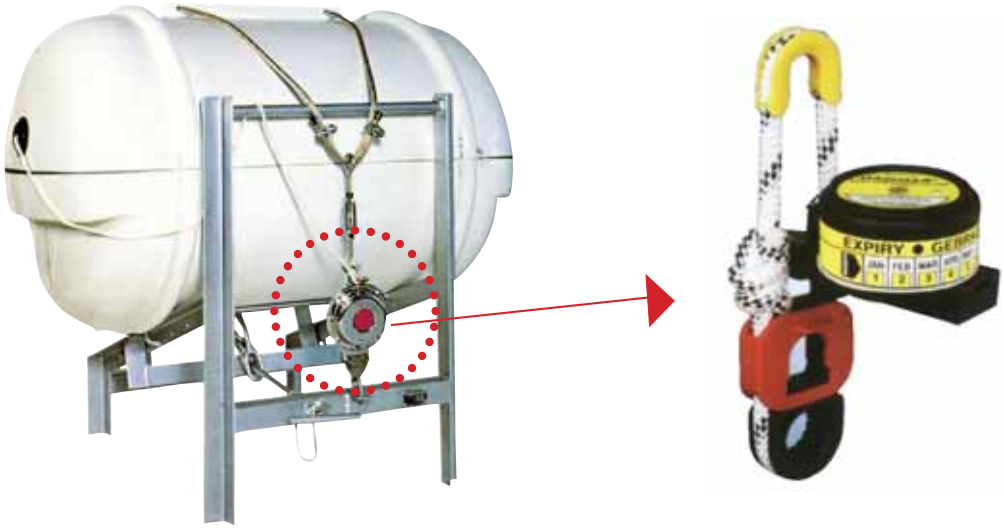

HAMMAR HYDROSTATIC RELEASE FOR LIFERAFT

STOCK CODE	BRIEF DESCRIPTION
RAFT-HMR-XH20R	HAMMAR H20R HYDROSTATIC RELEASE FOR LIFERAFT, USCG/EC MED

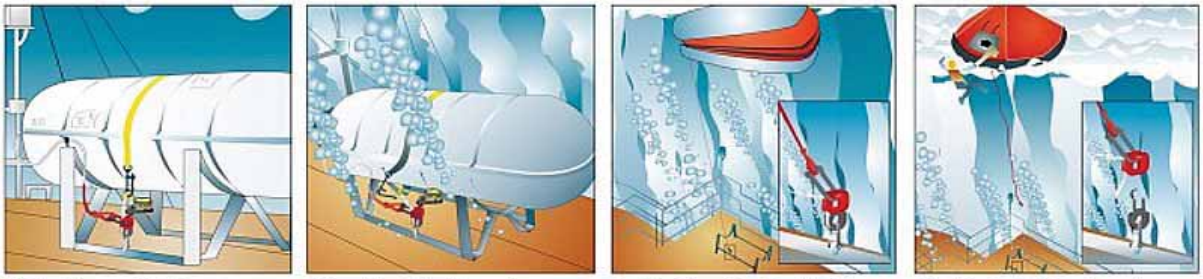

White Hammar H20 strong rope secured to deck or liferaft cradle and attached to liferaft lashing with a sliphook. Liferaft painter line shackled to the Red Weak Link connector.

If the ship sinks, the water pressure, within 4 metres, will activate the sharp knife, which cuts the strong rope and the liferaft will float free.

As the ship sinks, the liferaft painterline will be stretched and the liferaft starts to inflate.

Red Weak Link breaks and survivors can board the inflated liferaft.

The new generation H20 model has a Red Weak Link connector with a 3-step coupling device.

By eliminating the risk of incorrect installation, we have now made it even safer. The Hammar H20 is a hydrostatic release unit designed to fit liferafts of all shapes and sizes. It is made of glass fibre reinforced nylon, which prevents it from corroding. The Hammar H20 needs no annual service, maintenance or spare parts. You simply install a new one every two years and dispose of the old one. With the environment in mind, the old unit is 97% recyclable.
Thanks to simple handling procedures, storage costs are also kept to a minimum. The H20 enables easier, quicker, trouble-free installation, thereby considerably reducing your customers' downtime ashore.
Compared with conventional release units, the Hammar H20 offers savings of up to 50% over a 10-year period. The Hammar H20 is the best-selling hydrostatic release unit in the world. Its safe, reliable and simple design has earned it more worldwide approvals than any other unit. In fact, it's a small wonder!
So, if you want to make a sizeable difference to your economy, insist on installing the Hammar H20, the small release unit that gives you the big deal.

NOAH
For more information or order,
please contact our Sales Team at
Tel: **(65) 6266-0788** or E-mail: **sales@noah.com.sg**

HAMMAR MRRS

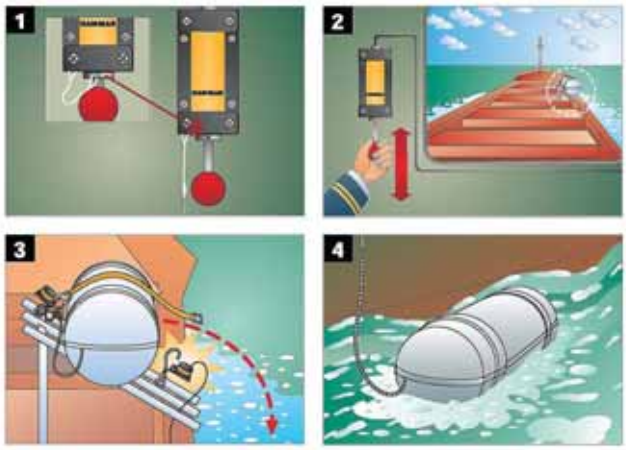

HAMMAR ERRS

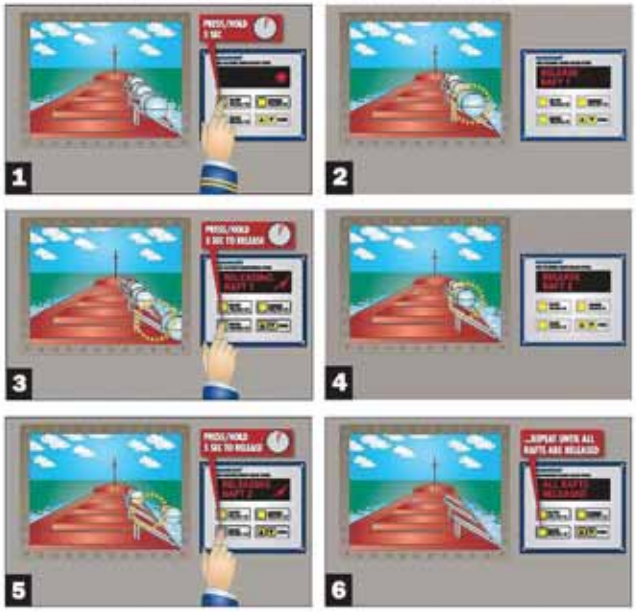

Firstly the Hammar Remote Release System is designed to release heavy loads, such as liferafts, evacuation systems or other lifesaving appliances with little effort on all kinds of vessels. It saves space because the lifesaving appliances can be placed out of the way and still be readily available. A few pump strokes or pressing the button, will activate the remote release unit, saving precious time and crew effort in case of an emergency. In other words, you have a release system for lifesaving appliances at an arm's length.

The remote release unit is made of glassfibre reinforced nylon and all hardware are made of acid resistant stainless steel or epoxy coated saltwater resistant alloy, which makes the whole installation completely weatherproof.

The Hammar Remote Release System needs no maintenance or spare parts and a minimum of annual service. Check the function of the system annually, install a new release unit every two years and dispose of the expired one. Also, a few splashes of paint do not impair the function of the system.
Lastly, the Hammar Remote Release System unit has a breaking load of the rope sling of 3750 lbs (1700 kg) making light work of a heavy job!

There are two different Hammar Remote Release Systems available: MRRS and ERRS

The Hammar MRRS:
Manual Remote Release System (vacuum) - for shorter systems with few liferafts

The Hammar ERRS:
Electronic Remote Release System - for major systems with more liferafts Both the MRRS and the ERRS systems are approved according to SOLAS and EU directive by leading shipping authorities.

SAFETY POSTERS

We have a wide range of IMO/SOLAS Symbols, Safety Signs, Warning Signs and Safety Posters used in all industries.

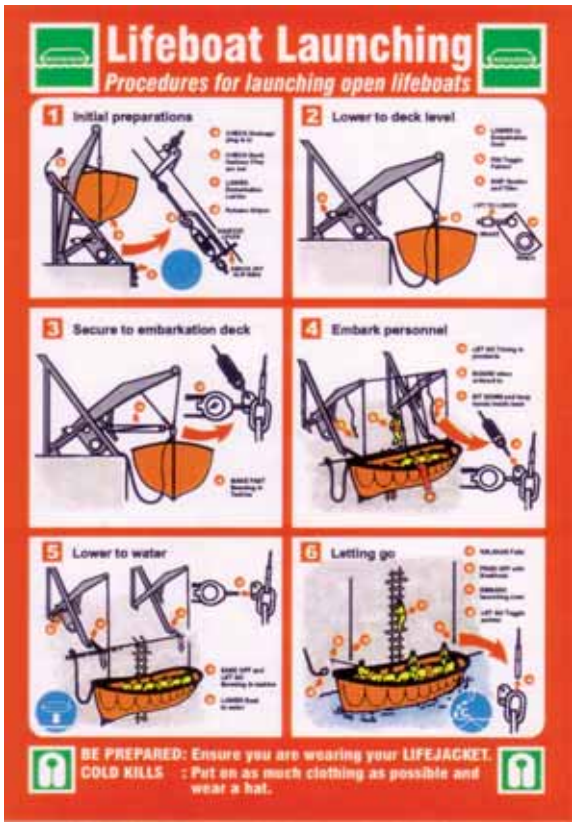

NOAH
For more information or order,
please contact our Sales Team at
Tel: **(65) 6266-0788** or E-mail: **sales@noah.com.sg**

Enclosed Space Entry
Safety procedures for entering enclosed spaces
1 Enclosed Spaces Are Dangerous
2 Prepare Space For Entry
3 Prepare Equipment
4 Prepare Safety Equipment
5 Communications and Procedures
6 Avoid Additional Hazards

TREATMENT FOR
ELECTRIC SHOCK
Electric current
Electrical injury
LOW VOLTAGE
HIGH VOLTAGE
ABC of Resuscitation
SHOUT FOR HELP REMOVE FROM DANGER

DON'T THROW GARBAGE OVERBOARD
IT'S AGAINST THE LAW
WITHIN 3 MILES OF THE NEAREST LAND & ALL INLAND WATERS
YOU CANNOT THROW ANYTHING AT ALL OVERBOARD
WITHIN 3 - 12 MILES OFFSHORE
YOU CANNOT THROW OVERBOARD
PLASTIC, DUNNAGE, LINING AND PACKING MATERIALS THAT FLOAT
WITHIN 12 - 25 MILES OFFSHORE
YOU CANNOT THROW OVERBOARD
PLASTIC, DUNNAGE, LINING AND PACKING MATERIALS THAT FLOAT
OUTSIDE 25 MILES OFFSHORE
YOU CANNOT THROW PLASTIC OVERBOARD
POLLUTION REGULATIONS
STOW IT-DON'T THROW IT

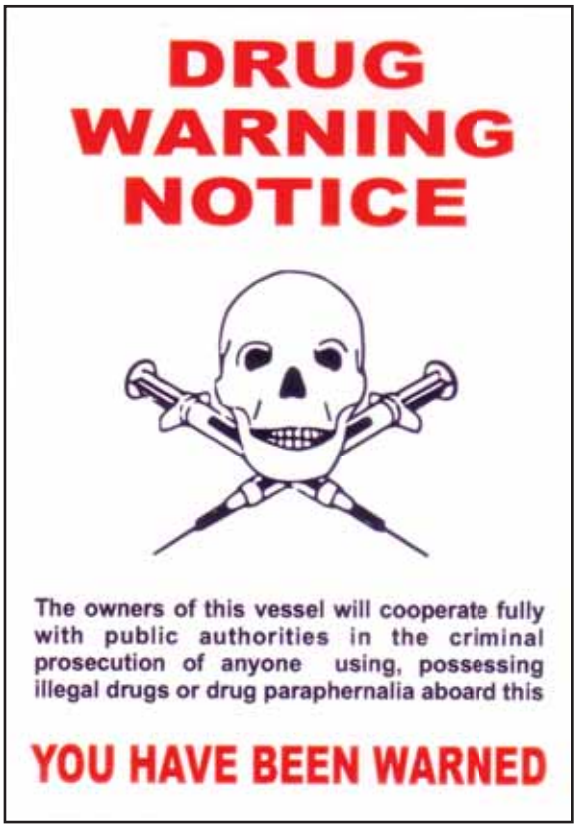
DRUG WARNING NOTICE
The owners of this vessel will cooperate fully with public authorities in the criminal prosecution of anyone using, possessing illegal drugs or drug paraphernalia aboard this
YOU HAVE BEEN WARNED

SAFETY SIGNS & IMO SYMBOLS

IMO Symbols

LIFEBOAT

EPIRB

LIFEBUOY

LIFEJACKET

MASTER STATION

LOWER LIFERAFT

IMMERSION SUIT

ARROW 45 DEGREE

START ENGINE

FASTEN SEAT BELTS

SURVIVAL CRAFT DISTRESS SIGNALS

ROCKET PARACHUTE FLARES

ARROW 45 DEGREE

NUMERIC 1

NUMERIC 9

ALPHABET A

ALPHABET Z

NOAH

For more information or order,
please contact our Sales Team at
Tel: **(65) 6266-0788** or E-mail: **sales@noah.com.sg**

IMO FIRE CONTROL SYMBOL

FIRE PLAN

BELL, FIRE, ALARM

HOSE BOX WITH SPRAY/JET

FOAM FIRE EXTINGUISHERS

LOCKER WITH ADDITIONAL BREATHING APPARATUS

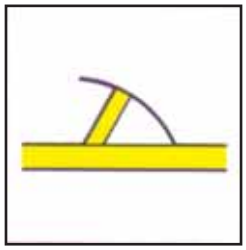
'B' CLASS FIRE DOOR

REMOTE VENTILATION SHUTOFF

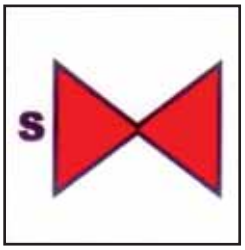

SPRINKLER SECTION VALVE

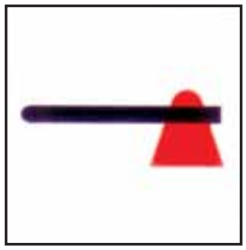
FIRE AXE

POWDER HOSE & HAND GUN

MANDATORY SIGNS

EYE PROTECTION

HEAD PROTECTION

EAR PROTECTION

HAND PROTECTION

DOOR KEEP SHUT

FALL PROTECTION

FOOT PROTECTION

KEEP CLEAR

FIRE EXIT KEEP CLEAR

SAFETY TAPES

3M - SOLAS REFLECTIVE TAPES

Marine Equipment Directive 96/98/EC and International Maritime Organization (IMO) Resolution A.658 (16) Annex 2. In addition, it is approved by the U.S. Coast Guard to meet 46 CFR part 164, Subpart 164.018 requirements for Type I and II retroreflective materials.)

STOCK CODE	BRIEF DESCRIPTION
STAP-MMM-01	3M 3150A REFLECTIVE TAPE, SOLAS 2'' X 50 METERS, ORIGIN: USA

KIWALITE - SOLAS GRADE PS TAPES

EU DIRECTIVE 96/98 EC ON MARINE EQUIPMENT (MED), SOLAS GRADE PRODUCT

STOCK CODE	BRIEF DESCRIPTION
STAP-SMD-01	KIWALITE SOLAS GRADE PS TAPE 2" X 45 METERS, ORIGIN: JAPAN

For more information or order,
please contact our Sales Team at
Tel: **(65) 6266-0788** or E-mail: **sales@noah.com.sg**

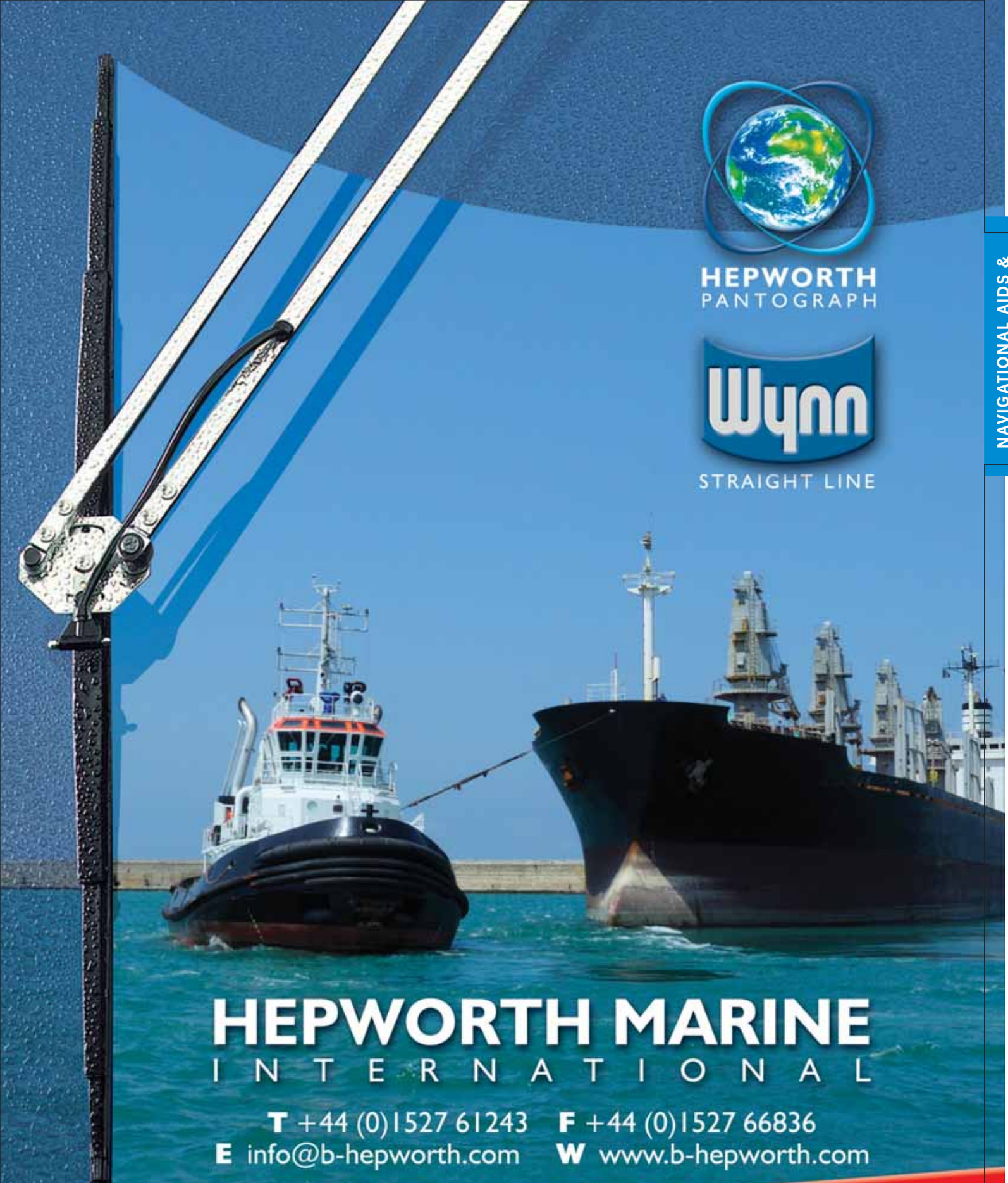

HEPWORTH PANTOGRAPH

Wynn

STRAIGHT LINE

HEPWORTH MARINE

INTERNATIONAL

T +44 (0)1527 61243 **F** +44 (0)1527 66836

E info@b-hepworth.com **W** www.b-hepworth.com

The ONLY Worldwide Distribution Network for Complete Wiper Systems and Spares from the World's Leading Manufacturer

davit international gmbh®

Decksausrüstung · deck equipment

davit international
company profile

The life saving appliances specialist, d-i davit international gmbh, is one of the mayor manufacturers of davit systems. The company is located in Sulingen, Germany, where it was founded in 1985. A global network of agencies and service stations runs the international sales and service organisation.
d-i davit international gmbh provides complete solutions for the design and manufacture of deck equipment and life saving appliances for all kind of vessels.

davit international
application areas

Equipped with extensive expertise and committed to provide products that meet individual customer requirements we deliver standard as well as custom-tailored solutions that are utilised in the following areas:

- Cruise ships and ferries
- Commercial vessels
- Navy applications
- Offshore applications
- Training schools
- Mega Yachts
- Special vessels

d-i davit international gmbh®

Sandstrasse 20
D-27232 Sulingen

P.O. Box 1566
D-27226 Sulingen

Tel.: +49 4271 9327 - 0
Fax: +49 4271 9327 - 27

info@davit-international.de
www.davit-international.de

NAVIGATIONAL AIDS & WHEELHOUSE ACCESSORIES

NAVIGATIONAL AIDS & WHEELHOUSE ACCESSORIES

The Marine Division has established a complete range of Navigational Aids to be equipped on the vessel's masthead right down to the wheelhouse.

Our equipment helps you to comply with IMO, COLREG and MARPOL regulations. This includes navigation lights, horns, magnetic compasses, wipers, right down to oily-water seperators and sewage treatment plant.

The Marine Division harnesses a broad range of engineering expertise in providing technical and product design support for your needs.

CONTENTS

PRODUCT CODE	PRODUCTS	PAGE
ALAM	ALARM & SIREN	98
BINO	BINOCULARS	99
CLVS	CLEARVIEW SCREENS	100
COMP	COMPASS	102
DAVT	DAVIT SYSTEMS	106
HCNZ	HOSE, COUPLING, NOZZLES REFER TO FIRE FIGHTING EQUIPMENT	183
HORN	HORN/SIREN, AIR/ELECTRIC & ACCESSORIES A) AIR HORNS B) ELECTRIC HORNS	108
LNAV	LIGHT, NAVIGATIONAL	120
LSLT	LIGHT, SEARCHLIGHT REFER TO MARINE SAFETY	66
SEAT	HELMSMAN SEATS	134
WHAC	WHEELHOUSE/BRIDGE ACCESSORIES	140
WIPE	MARINE WIPERS	144

ALARM & SIREN

IBUKI

MOTOR SIREN
F30

MOTOR SIREN

IBUKI is the first company developed a motor siren in Japan. F30 and F40 series compact motor siren are the current model after the continuous improvement. The each size is almost same and the different frequency is available. Variant models are available with lamp, rotating light and strobo light.

STOCK CODE	BRIEF DESCRIPTION
ALAM-IBU-SM1D	IBUKI MOTOR SIREN F30, IP56, 220VAC, 50/60HZ

F30 WITH LAMP

F30 WITH RF5

NOAH

For more information or order,
please contact our Sales Team at
Tel: **(65) 6266-0788** or E-mail: **sales@noah.com.sg**

BINOCULARS

FR-7500R

BINOCULARS

STOCK CODE	BRIEF DESCRIPTION
BINO-GFC-CF750	FR-7500R PRODUCT CODE: KR.V1400.36 7 X 50, CENTRAL FOCUS, RUBY COATED & RUBBER COVERED COLOUR: BLACK
BINO-GFC-IF750	OCEAN-7500WP 7 X 50, INDIVIDUAL FOCUS, RUBY COATED, WATERPROOF, NITROGEN PURGED & RUBBER COVERED COLOUR : YELLOW

OCEAN-7500WP

CLEARVIEW SCREENS

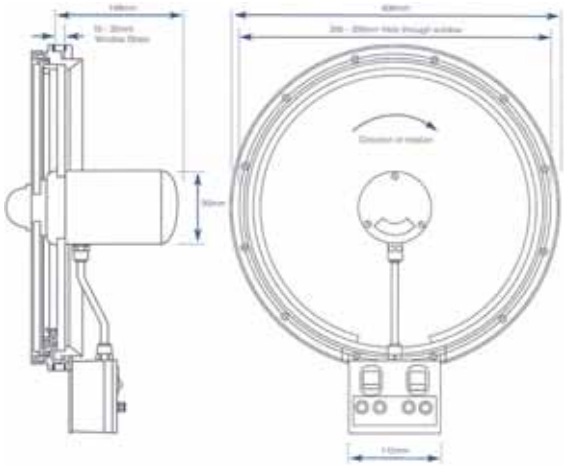

WYNN TYPE C350 CLEAR VIEW SCREEN

The C350 is the latest Clear View Screen design. Switch on and you can see clearly, whatever the weather - rain, snow or ice - for perfect continuous visibility.
Fully complies with ISO 3904.

High Reliability
- No Maintenance Sealed for life bearings.
- Thermal overload fitted.
- IP33 motor protection.

Perfect Visibility
- High rotation speeds.
- Powerful de-icing heater.

Quiet Operation
- Smooth dynamically balanced induction motor.
- Direct drive.
- EMC silent.
- High quality bearings.

Rugged and Long Life
- Stainless steel and marine grade aluminium parts.
- Toughened glass.
- Unique glass decoupling to avoid glass breakages.

No Leaks
- High quality rotating and labyrinth seals.
- Gas and leak tested.

Weight & Dimension
Net: 15kg, Gross: 18kg, Dimension: 520 x 480 x 360mm

STOCK CODE	BRIEF DESCRIPTION
CLVS-WYN-350D	WYNN C350 CLEAR VIEW SCREEN, 230VAC

For more information or order,
please contact our Sales Team at
Tel: **(65) 6266-0788** or E-mail: **sales@noah.com.sg**

MODEL: DS-300 & DS-350

MODEL: DS-220 & DS-250

DAIKO CLEARVIEW SCREENS

Clear vision is of vital importance to the helmsmen of all sea-going vessels and to the drivers of any transports on land under all weather conditions. The revolving disc of our Clear-View Screen throws off raindrops, snowflakes, spray or smuts, so that vision remains perfectly clear and sharp.

MAIN: Corrosion resistant aluminum alloy is used for the main parts.
REVOLVING DISC: Transparency and parallel allowance: Excellent tempered glass is used.
MOTOR: Noiseless and no vibration.
Power source: DC / AC optional

Model	Frame Diameter (mm)	Visual Screen Diameter (mm)	Cut-out Diameter (mm)	Min. Grass Thickness (mm)	Weight (Kg)
DS-300	349	300	325	5-8	7.5
DS-350	414	350	375	6-8	12.7
DS-220	265	220	240	5	5.0
DS-250	298	250	270	5	5.8

STOCK CODE	BRIEF DESCRIPTION
CLVS-DAI-300B	"DAIKO" DS300 CLEAR VIEW SCREEN, 300MM DIA, 24VDC
CLVS-DAI-300D	"DAIKO" DS300 CLEAR VIEW SCREEN, 300MM DIA, 220VAC
CLVS-DAI-350D	"DAIKO"DS-350 CLEAR VIEW SCREEN, 350MM DIA, 220VAC/60HZ WITH BOLT & NUT
CLVS-DAI-Z220	DAIKO DS-220 CLEAR VIEW SCREEN, 220MM DIA
CLVS-DAI-Z250	DAIKO DS-250 CLEAR VIEW SCREEN, 250MM DIA

KWANG WOON CLEARVIEW SCREENS

STOCK CODE	BRIEF DESCRIPTION
CLVS-HWA-350D	"KWANG WOON" KW-350-P CLEAR VIEW SCREEN, 220VAC/50HZ

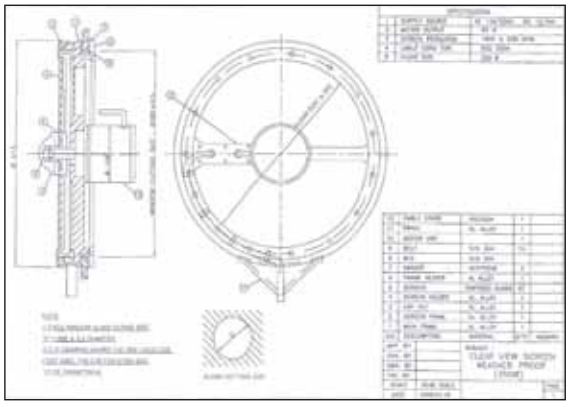

COMPASS

DAIKO

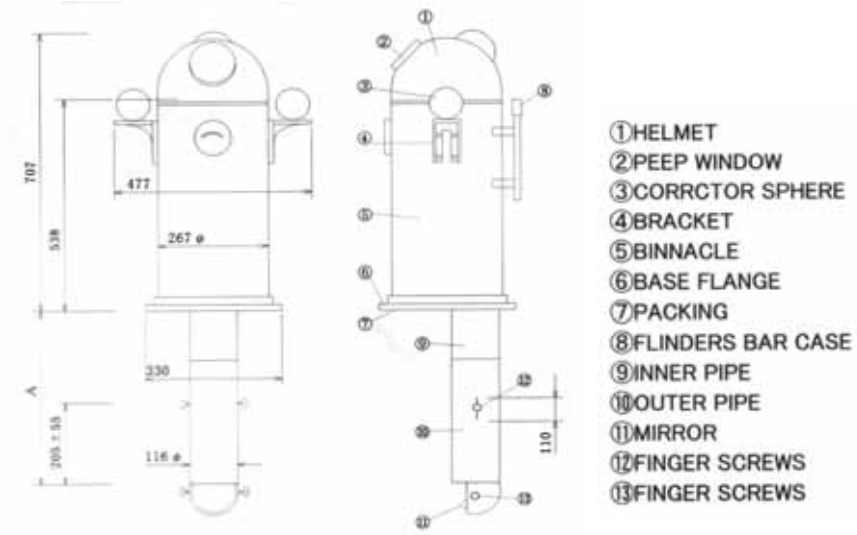

DAIKO REFLECTOR COMPASS

Projector Binnacle Compass Type SR-150PK is installed upon the flying bridge deck and the compass in the Wheelhouse for both standard and steering purposes.

The binnacle has an optical arrangement by which the graduations of the card is projected on an upper part of the front wall of steering room. This serves for a reduction in the price of ships, improved magnetic efficiency and enlarge steering room space.

STOCK CODE	BRIEF DESCRIPTION
COMP-SMD-CRFL1	DAIKO, SR-150PK, MAGNETIC REFLECTOR COMPASS, CARD SIZE: 6" (150MM)
COMP-SMD-CRFL1-01	DAIKO, SPARE COMPASS BOWL FOR SR-150PK

T150B TABLE MOUNT COMPASS

STOCK CODE	BRIEF DESCRIPTION
COMP-SMD-CTBM6	DAIKO, T150B, TABLE MOUNT MAGNETIC COMPASS, CARD SIZE: 6" (150MM)

NOAH

For more information or order,
please contact our Sales Team at
Tel: **(65) 6266-0788** or E-mail: **sales@noah.com.sg**

TOKYO COMPASS

970C

Durable plastic housing and bracket with detachable sunshade hood, with built-in compensators and lighting system. Universal bracket permits horizontal or vertical mounting.

STOCK CODE	BRIEF DESCRIPTION
COMP- RIV-BK3S1-A	TOKYO, 970C, BRACKET MOUNT MARINE COMPASS, WIDE ANGLE OPERATION SYSTEM

7800C

Durable plastic housing and bracket with detachable sunshade hood, with built-in compensators and lighting system.

STOCK CODE	BRIEF DESCRIPTION
COMP- RIV-BK3S1-A	TOKYO, 970C, BRACKET MOUNT MARINE COMPASS, WIDE ANGLE OPERATION SYSTEM

LILLEY & GILLIE COMPASS MK2000

For commercial vessels over 150grt, fishing vessels over 45m and naval vessels with or without dg correction.

Suitable for use with lilley & gillie (and other) transmitting magnetic compass (tmc) equipment to operate repeaters, off-course alarms and outputs to navigation equipment including gyro back up.

Approval: european marine equipment directive (med) and other maritime authorities.

STOCK CODE	BRIEF DESCRIPTION
COMP-LNG-CRFL1	LILLEY & GILLIE, MK2000, SCH103, REFLECTOR MAGNETIC COMPASS, CARD DIAMETER: 175MM
COMP-LNG-CRFL1	LILLEY & GILLIE, MK2000, SCH105, REFLECTOR MAGNETIC COMPASS
COMP-LNG-CFRL1-01	CARD DIAMETER: 175MM INCLUDE 01 SPARE COMPASS BOWL

LILLEY & GILLIE SPARE COMPASS

STOCK CODE	BRIEF DESCRIPTION
COMP- LNG-CFRL1-01	LILLEY & GILLIE, FW9859, REPLACEMENT COMPASS BOWL

For more information or order,
please contact our Sales Team at
Tel: **(65) 6266-0788** or E-mail: **sales@noah.com.sg**

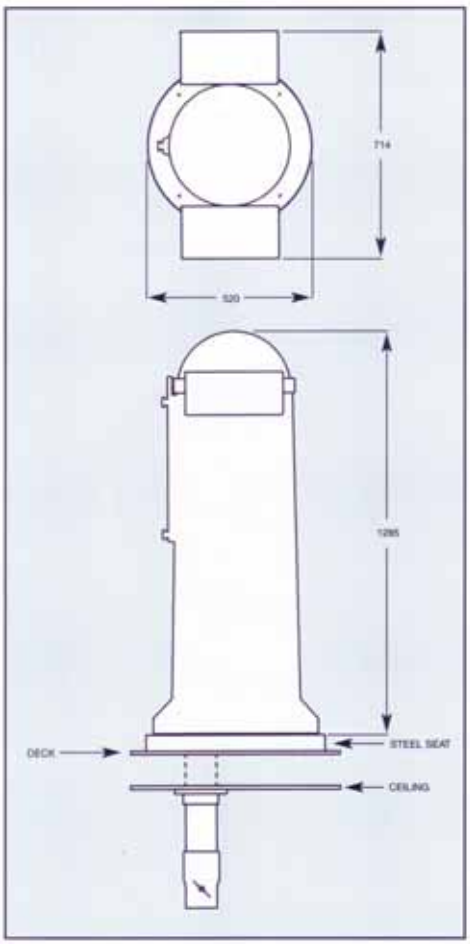

Lilley & Gillie Mk2000 Magnetic Compass Outfit

The compass outfit is available in Reflector, Non-Reflector and Naval (DG Correction) versions with the following features.

Material	Reinforced glassfibre binnacle.	
Correction	A full set of compensating magnets for B, C and H plus adequate quadrantal corrector and flinders plates.	
Periscope	Telescopic with a maximum vertical length of two metres.	
Fixings	Rubber base gasket and four S/S MK20x90 mounting bolts, nuts and washers.	
Lighting	Two 24VDC 15W lamps and spare fitted within the binnacle. Control of lamps, dimmer and power supply by the FW9862 Control Unit. A two position dimmer switch is included on the control unit.	
Power Supplies	The FW9862 Control Unit includes a transformer and has AC mains (110 or 220V) and 24VDC inputs with 24VDC outputs. Both the input and output circuits are switched thereby maintaining illumination under all circumstances. A two position dimmer switch is included on the control unit.	
Compass	FW9852, Lilley & Gillie "OCEAN", Class A, 175mm Reflector Card.	
Azimuth Mirror	The FW9011 Azimuth Mirror/Circle meets the basic requirements but as an option there is also the FW9010 "Thompson" Type Azimuth Mirror, often preferred by European Navigating Officers. Both supplied in hardwood boxes.	
Weights	Reflector Binnacle	35kg
	Non-Reflector Binnacle	30kg
	"OCEAN" Compass	8.5kg
	Lighting Control Unit	0.62kg
	FW9011 Azimuth in box	1.45kg
	FW9010 Azimuth in box	2kg
Colour	Binnacle, Dark Admiralty Grey (Others available) Periscope Assembly, Black Lighting Control Unit, Black with white lettering	

DAVIT SYSTEMS

davit international
Decksausrüstung · deck equipment

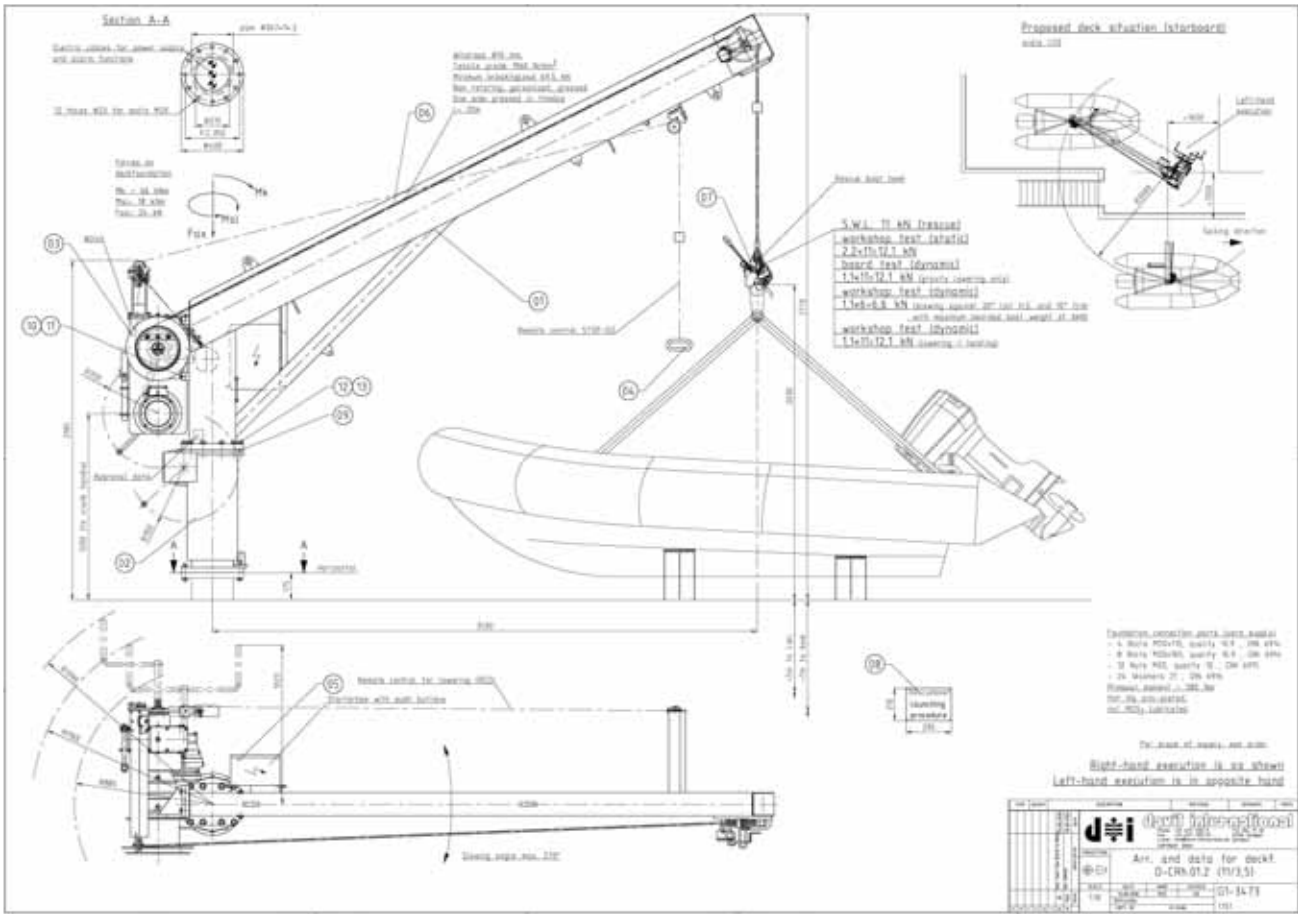

	STOCK CODE	BRIEF DESCRIPTION
>	DAVT-DVI-DCRH	SLEWING DAVIT, SWL: 11KN, 3.5METER OUTREACH, MANUAL SLEWING

NOAH
For more information or order,
please contact our Sales Team at
Tel: **(65) 6266-0788** or E-mail: **sales@noah.com.sg**

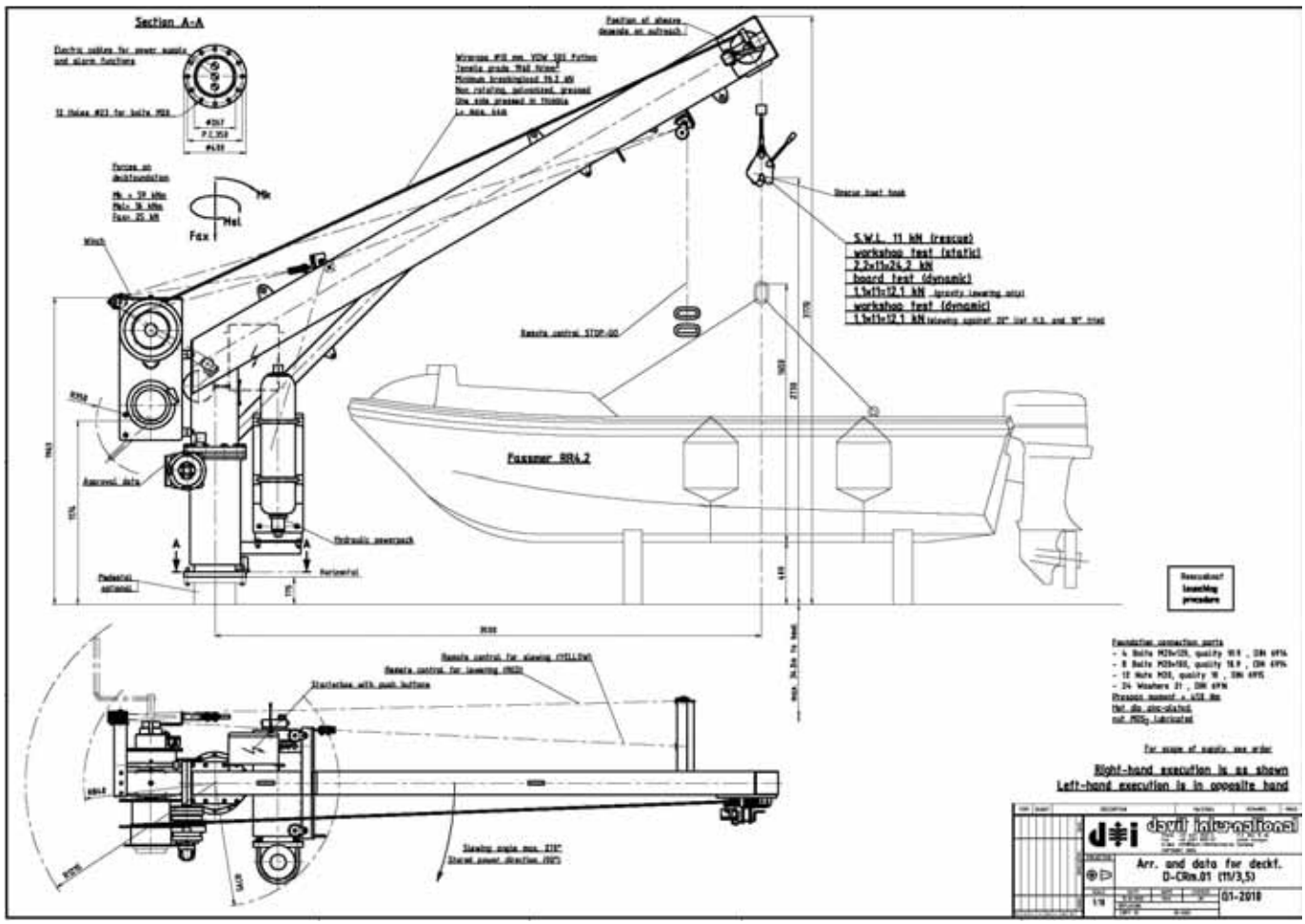

STOCK CODE	BRIEF DESCRIPTION
DAVT-DVI-DCRM	SLEWING DAVIT, SWL: 11KN, 3.5METER OUTREACH, STORED HYDRAULIC POWER SLEWING

AIR / ELECTRIC HORNS

IBUKI

Vessel Length Less Than 20m

ES15

Micro Phone & Amplifier

Electric Horn ES15
LLYODS - MCA approved

STOCK CODE	BRIEF DESCRIPTION
HORN-IBU-E1B2	IBUKI ELECTRONIC HORN, ES15, 24VDC

IBUKI ES15 Electric horn is new horn which unites Corleg new regulation [IMO A.910(22)]. The driven source is DC12 and 24V. The body is aluminum solid body for long life use under marine severe conditions. Whole unit is composed of the horn unit, push button switch. The free signal operation is available via push button.

Optional amplifier and microphone are enabled to broadcast, public address, musis and radio program.

TYPE	PROTECTION	FUNDAMENTAL FREQUENCY (HZ)	SOUND LEVEL 1/3RD OCTAVE (DB/1M)	VOLTAGE	LENGTH	HORN DIAMETER(MM)	WEIGHT(KG)
ES15	IP56	675	OVER 115DB	DC12V 1.6A	300	235	2.2
				DC24V 0.8A			

Electric Horn ES90
LLYODS - MCA approved

STOCK CODE	BRIEF DESCRIPTION
HORN-IBU-E1B1	IBUKI ELECTRIC HORN, E90, 24VDC

ES90

IBUKI E90 Magnet Horn employs an electrical power source. An extremely rugged construction ensures the reliable operation. The oscillator unit is built-in, no need to install another oscillator unit in the wheelhouse. Power can be switched on / off via compact switch.

TYPE	PROTECTION	FUNDAMENTAL FREQUENCY (HZ)	SOUND LEVEL 1/3RD OCTAVE (DB/1M)	VOLTAGE	LENGTH	HORN DIAMETER(MM)	WEIGHT(KG)
E90	IP56	635	OVER 120DB	DC24V 3A	443	268	6.4

NOAH

For more information or order,
please contact our Sales Team at
Tel: **(65) 6266-0788** or E-mail: **sales@noah.com.sg**

Vessel Length Overall 20m to less than 75m

Air Horn A100EH
LLYODS - MCA approved

STOCK CODE	BRIEF DESCRIPTION
PICK-IBU-A2X11	IBUKI AIR HORN, A100, C/W: SOLENOID VALVE, 24VDC
PICK-IBU-A2X12	IBUKI AIR HORN, A100, C/W: SOLENOID VALVE, 230VAC
HORN-IBU-A2B1P	IBUKI AIR HORN,A100E, C/W: PULL & MAGNET VALVE, 24VDC
HORN-IBU-A2D1P	IBUKI AIR HORN, A100E, C/W: PULL & MAGNET VALVE, 220VAC
HORN-IBU-A2B1P-H	IBUKI AIR HORN, A100EH, C/W: PULL & MAGNET VALVE & HEATER, 24VDC
HORN-IBU-A201P-H	IBUKI AIR HORN,A100EH, C/W: PULL & MAGNET VALVE & HEATER, 220VAC
HORN-IBU-XAFIL-1	IBUKI AIR FILTER

A100EH

AIR FILTER

IBUKI A100 Series air horn employs a diaphragm driven by compressed air. Operation is controlled either manually or via a solenoid. The lightweight body is easy installtion. Heater is available for use in cold area.

Air Filter: Connecting an air filter to the air inlet port of IBUKI air horn, it prevents from sticking the foreign matter in the valve.

TYPE	PROTECTION	FUNDAMENTAL FREQUENCY (HZ)	SOUND LEVEL 1/3RD OCTAVE (DB/1M)	VOLTAGE		AIR CONSUMPTION	LENGTH (MM)	HORN DIAMETER (MM)	WEIGHT(KG)
				SOLENOID	HEATER				
A100E	IP56	310	OVER 130DB	AC100V 1ø 0.2A AC220V 1ø 0.1A DC24V 0.8A	--	15	366	165	6.6
A100EH (WITH HEATER)					AC100V / 220V		418		12.7

HEATER SWITCH BLOW SWITCH

Electric Horn E150
LLYODS - MCA approved

E150

STOCK CODE	BRIEF DESCRIPTION
HORN-IBU-E2B1	IBUKI ELECTRIC MAGNET HORN, E150, 24VDC
HORN-IBU-E2B1-H	IBUKI ELECTRIC MAGNET HORN, E150H, 24VDC, C/W: HEATER, 220VAC
HORN-IBU-E2B1-01	IBUKI SPARE LEVER BLOW SWITCH FOR E150 HORN

IBUKI E150 Magnet horn is compact and lightweight body driven by electric power source. Tone is generated via electro-magnet to diaphragm vibration. The horn unit and oscillator are one unit. the working voltage is DC24V as standard.
Heater is available for use in cold area.

TYPE	PROTECTION	FUNDAMENTAL FREQUENCY (HZ)	SOUND LEVEL 1/3RD OCTAVE (DB/1M)	VOLTAGE		LENGTH (MM)	HORN DIAMETER (MM)	WEIGHT(KG)
				OSILLATOR	HEATER			
E150	IP56	320	OVER 130DB	DC24V	AC100V / AC220V / DC24V	546	390	15
E150-H						558		22

ES300
OSCILATOR

Electric Horn ES300
LLYODS - MCA approved

ES300

STOCK CODE	BRIEF DESCRIPTION
HORN-IBU-ZE2B4	IBUKI ELECTRONIC HORN, E5300, C/W: 3 SIGNAL TIME CONTROLLER, 24VDC, PA & AUXILIARY SYSTEM NHKK CERT

IBUKI ES300 Electronic horn employs a speaker unit to reproduce a signal from an electronic oscillator. The speaker unit is installed four driver units to be extremely low power consumption. Due to the low load, the failure rate is extremely low. The oscillator unit is installed the blow switch for manual and auto mode of 3kinds of fog blow related to Corleg rules 35. Besides there are installed microphone, external input for outboard broadcast, electronic alarms preset and an output contact for general emergency alarm. The working voltage is DC24V as standard.

TYPE	PROTECTION	FUNDAMENTAL FREQUENCY (HZ)	SOUND LEVEL 1/3RD OCTAVE (DB/1M)	VOLTAGE		LENGTH (MM)	HORN DIAMETER (MM)	WEIGHT(KG)
				OSILLATOR	HEATER			
ES300	IP56	420	OVER 130DB	DC24V 15A	--	606	480	18
ES300-H (WITH HEATER)					AC100V / AC220V / DC24V			

NOAH

For more information or order,
please contact our Sales Team at
Tel: **(65) 6266-0788** or E-mail: **sales@noah.com.sg**

Vessel Length Overall 75m to less than 200m

Air Horn A150 Series
LLYODS - MCA approved

STOCK CODE	BRIEF DESCRIPTION
PICK-IBU-A3X11	IBUKI AIR HORN, A150SS, C/W SELENOID VALVE, 24VDC
PICK-IBU-A3X12	IBUKI AIR HORN, A150SS, C/W: SOLENOID VALVE, 230VAC
HORN-IBU-A3C1P	IBUKI AIR HORN A150ESS, C/W: PULL & MAGNET VALVE, 110VAC
HORN-IBU-A3D1P	IBUKI AIR HORN, A150ESS, C/W: PULL & MAGNET VALVE, 220VAC
HORN-IBU-A3C1P-H	IBUKI AIR HORN, A150ESSH, C/W: PULL & MAGNET VALVE & HEATER, 220VAC
HORN-IBU-A3D1P-H	IBUKI AIR HORN, A150ESSH, C/W: PULL & MAGNET VALVE & HEATER
HORN-IBU-XADIA-3A	IBUKI DIAPHRAGM FOR A150ESS HORN
HORN-IBU-XADIA-3B	IBUKI DIAPHRAGM FOR A150E & A150ES
HORN-IBU-XAFIL-3B	IBUKI AIR FILTER

A150ESSH

AIR FILTER

IBUKI A150 Series air horn employs a diaphragm driven by compressed-air, and operation is controlled either manually or via a solenoid. A150ESS model is compact and lightweight body. Heater and snow guard are available for use in cold area.

Air Filter: Connecting an air filter to the air inlet port of IBUKI air horn, it prevents from sticking the foreign matter in the valve.

TYPE	PROTECTION	FUNDAMENTAL FREQUENCY (HZ)	SOUND LEVEL 1/3RD OCTAVE (DB/1M)	VOLTAGE		AIR CONSUMPTION	LENGTH (MM)	HORN DIAMETER (MM)	WEIGHT(KG)
				SOLENOID	HEATER				
E100E	IP56	310	OVER 130DB	AC100V 1ø 0.2A AC220V 1ø 0.1A DC24V 0.8A	AC100V / 220V	35	655	240	19.5
A100EH (WITH HEATER)							688		25

Electric Horn MH550
LLYODS - MCA approved

STOCK CODE	BRIEF DESCRIPTION
HORN-IBU-E3	IBUKI ELECTRIC HORN, MH550 (SPECIFY VOLTAGE WHEN ORDERING).
HORN-IBU-E3-H	IBUKI ELECTRIC HORN WITH HEATER, MH550 (SPECIFY VOLTAGE WHEN ORDERING).
ZMIS-IBU-ZZZ	IBUKI RELAY BOX FOR MH550 & MH550H (REQUIRED WITH A NEW HORN)
ZMIS-IBU-ZZZ	IBUKI SHOCK ABSORBER FOR MH550 & MH550H (OPTIONAL ITEM)

MH550

IBUKI MH550H Piston horn is electrically driven, and employs a motor to drive reciprocating piston mechanism to produce a powerful tone. The motor is only operated on blowing for low power consumption. MH550H is just required electrical wiring without pneumatic connections for installation on the foremast. Heater and snow guard are available for use in cold area.

TYPE	PROTECTION	FUNDAMENTAL FREQUENCY (HZ)	SOUND LEVEL 1/3RD OCTAVE (DB/1M)	VOLTAGE		LENGTH (MM)	HORN DIAMETER (MM)	WEIGHT(KG)
				SOLENOID	HEATER			
MH550	IP56	135	OVER 138DB	AC220V 3ø 18.6A AC440V 3ø 9.3A	AC100V / 220V	877	580	167
MH550-H (WITH HEATER)								176

Vessel Length Overall More than 200m

Air Horn A200 Series
LLYODS - MCA approved

STOCK CODE	BRIEF DESCRIPTION
HORN-IBU-A4	IBUKI AIR HORN, A200ES C/W PULL & MAGNET VALVE.
HORN-IBU-A4-H	IBUKI AIR HORN, A200ESH C/W PULL & MAGNET VALVE AND HEATER
HORN-IBU-XADIA-4A	IBUKI DIAPHRAGM FOR A200ES HORN
HORN-IBU-XAFIL-2	IBUKI AIR FILTER

A200ESH-B

AIR FILTER

IBUKI A200 series air horns employ a diaphragm driven by compressed-air.
Operation is controlled manual and solenoid. Diaphragm of A200ES-B is a new material for lower air consumption and extremely long life. Heater and snow guard are available for use in cold area.

Air Filter: Connecting an air filter to the air inlet port of IBUKI air horn, it prevents from sticking the foreign matter in the valve.

TYPE	PROTECTION	FUNDAMENTAL FREQUENCY (HZ)	SOUND LEVEL 1/3RD OCTAVE (DB/1M)	VOLTAGE		AIR CONSUMPTION	LENGTH (MM)	HORN DIAMETER (MM)	WEIGHT(KG)
				SOLENOID	HEATER				
E200ES	IP56	128	OVER 143DB	AC100V 1ø 0.2A AC220V 1ø 0.1A DC24V 0.8A	AC100V / 220V	50	1215	580	44
A200ESH (WITH HEATER)							1231		47

Electric Horn MH700
LLYODS - MCA approved

STOCK CODE	BRIEF DESCRIPTION
HORN-IBU-E4	IBUKI ELECTRIC HORN (SPECIFY VOLTAGE WHEN ORDERING).
HORN-IBU-E4-H	IBUKI ELECTRIC HORN WITH HEATER (SPECIFY VOLTAGE WHEN ORDERING).
ZMIS-IBU-ZZZ	IBUKI RELAY BOX FOR MH700 & MH700H (REQUIRED WITH A NEW HORN)
ZMIS-IBU-ZZZ	IBUKI SHOCK ABSORBER FOR MH700 & MH700H (OPTIONAL ITEM)

MH700

IBUKI MH700H Piston horn is electrically driven, and employs a motor to drive reciprocating piston mechanism to produce a powerful tone. The motor is only operated on blowing for low power consumption. MH700H is just required electrical wiring. Pneumatic supply is not required for installation on the foremast. Heater and snow guard are available for use in cold area.

TYPE	PROTECTION	FUNDAMENTAL FREQUENCY (HZ)	SOUND LEVEL 1/3RD OCTAVE (DB/1M)	VOLTAGE		LENGTH (MM)	HORN DIAMETER (MM)	WEIGHT(KG)
				SOLENOID	HEATER			
MH700	IP56	135	OVER 143DB	AC100V 3ø 27A AC220V 3ø 13.5A	AC100V / 220V	877	580	143
MH700-H (WITH HEATER)								152

For more information or order,
please contact our Sales Team at
Tel: **(65) 6266-0788** or E-mail: **sales@noah.com.sg**

Inboard Signal Equipment

MOTOR SIREN F30

MOTOR SIREN

IBUKI is the first company developed a motor siren in Japan. F30 and F40 series compact motor siren are the current model after the continuous improvement. The each size is almost same and the different frequency is available. Variant models are available with lamp, rotating light and strobo light.

STOCK CODE	BRIEF DESCRIPTION
ALAM-IBU-SM1D	IBUKI MOTOR SIREN F30, IP56, 220VAC, 50/60HZ

Air Horns 75UL Series

STOCK CODE	BRIEF DESCRIPTION
HORN-IBU-AAX1	IBUKI AIR HORN, 75UL, WITH 10MM PIPE INLET

75UL

TYPE	PROTECTION	FUNDAMENTAL FREQUENCY (HZ)	SOUND LEVEL 1/3RD OCTAVE (DB/1M)	AIR CONSUMPTION	LENGTH (MM)	HORN DIAMETER (MM)	WEIGHT(KG)
75-EUL	IP56	311	132DB	10	380	150	4

EA115

EA113S

Electronic Alarm EA Series

STOCK CODE	BRIEF DESCRIPTION
HORN-IBU-EA115	IBUKI ELECTRONIC ALARM EA115
HORN-IBU-EA115-E	IBUKI LECTRONIC ALARM EA115E
HORN-IBU-EA113-S	IBUKI ELECTRONIC ALARM EA113S
HORN-IBU-EA110	IBUKI ELECTRONIC ALARM EA110
HORN-IBU-EA110-E	IBUKI ELECTRONIC ALARM EA110E

EA110

TYPE	PROTECTION	FUNDAMENTAL FREQUENCY (HZ)	SOUND LEVEL 1/3RD OCTAVE (DB/1M)	VOLTAGE	LENGTH (MM)	HORN DIAMETER (MM)	WEIGHT(KG)
EA115	IP56	I TONE SELECT	115DB	AC220V 0.1A AC100V 0.2A DC24V 0.6A	308	310	5
EA115E		8 TONE					
EA113S		1 TONE SELECT	113DB	AC220V 0.1A AC100V 0.2A DC24V 0.8A	260	152	2.5
EA110		I TONE SELECT	110DB	AC220V 0.1A AC100V 0.2A DC24V 0.6A	276	152	5
EA11OE		8 TONE					

Time controller

Time Controller

STOCK CODE	BRIEF DESCRIPTION
HORN-IBU-T6DNX-X1 (W/O HEATER)	IBUKI TIME CONTROLLER, STM8F, 6 SIGNALS C/W: GENERAL ALARM & PA INTERFACE (SPECIFY VOLTAGE WHEN ORDERING).
HORN-IBU-T6DNH-X1 (W/HEATER)	IBUKI TIME CONTROLLER, STM8F, 6 SIGNALS C/W: GENERAL ALARM & PA INTERFACE (SPECIFY VOLTAGE WHEN ORDERING).

IBUKI STM Series time controller gives the fog signal automatically according to the International Regulations for Preventing Collisions at Sea 1972 (COLREGS) Rule 35.

Variant contacts and in / output are available as the general emergency alarm signal, the terminal for external contacts and other interface on request. The standard configuration is shown below. The time controller is generally installed in the bridge console. It is availoable the control switch such as auto fog signal, whistle free blow, heater and maneuvering light. Push button switch and Morse key are installed on both wings and bridge for manual operation to response to the abnormal situations. IBUKI time controller is immune against the electrical noise.

Variant models are available for power supply voltage, flush mount, wall mount and console mount for specific needs.

For more information or order,
please contact our Sales Team at
Tel: **(65) 6266-0788** or E-mail: **sales@noah.com.sg**

Auto Bell and Gong System EDBG 100

IBUKI EDGB100 Auto Bell and Gong System is complied equipment on the International Regulations for Preventing Collisians at Sea 1972 (COLREGS) Rule 33 and gives the signal automatically on Rule 35.

The Bell horn unit is installed at the forepart, ad the gong unit at the stern. Each code is operated via each button on the panel mount controller. Waterproof horn as standard, explosion proof is available as option. CE mark has been acquired.

Auto Bell and Gong System Signal Formats

A vessel less than 100m in length	A vessel at anchor	5S ≧55S
●Bell	A vessel aground	4S 2S 5S 2S 4S ≧43S
A vessel 100m more in length	A vessel at anchor	5S 5S ≧50S
●Bell ×Gong	A vessel aground	4S 2S 5S 2S 4S 5S ≧38S

Type	Sound Level	Voltage	Output	Weight (kg)	
				Horn Unit	Control Unit and Oscillator
EDBG 100	Over 110dB	AC100V AC220V DC24V	100W	25	10

Sound Reception System SRS Series

Type approval no.4671

Patented

- Sound reception system..JPN patent no.3482600
- Method and equipment for check the sound deirection...JPN Patent no.3440414
- Waterproof microphone equipment...JPN patent no.3383941

Sound reception system is mandatory equipment in accordance with the revisons to SOLAS Chapter V effected on 2002. IBUKI Sound reception system is complied with the new regulation to support the maritime safety. Main function is to receive external acoustic signals, reproduce and indicate the direction on the bridge. The microphone unit is fully waterproof and durable structure in all-weather.

SRS100 is combined four microphones in one unit, SRS400 is separate. Both are simple wiring and maintenance-free. The working voltage is DC24V as standard, AC100V and 220V are available as option with a converter.

SRS 100 MICROPHONE UNIT

Principle Functions

1. Receive the external acoustic signals and reproduce on the bridge.

2. Indicate the signal direction on the bridge.

3. Co-operation with IBUKI time controller, LED is lit when own whistle blows.

4. A monitor switch activated continuously for monitor the all external on the bridge.

SRS CONTROL PANEL

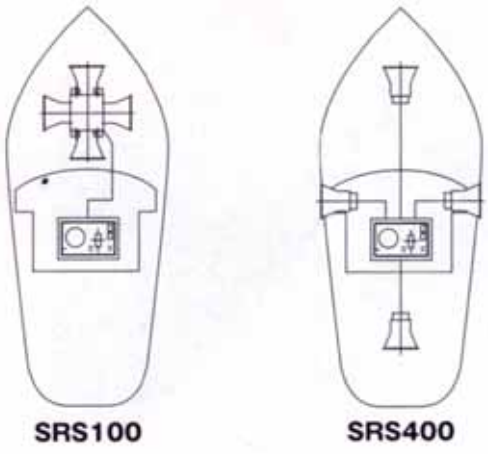

IBUKI SOUND RECEPTION SYSTEM

NOAH

For more information or order,
please contact our Sales Team at
Tel: **(65) 6266-0788** or E-mail: **sales@noah.com.sg**

SAFETY & RELIABILITY

IBUKI...All-Round Expertise in Marine Signal Manufacture

AIR / ELECTRIC HORNS

LLYODS Approved for VESSEL 12M < LENGTH < 20M

Approved signalling whistle complete with Ø 200 mm horn white painted, with electric compressor and mounting accessories. Meets COLREG 1972 IMO class IV regulations.
Approvals: RINA, LLOYD'S REGISTER MCA, BUREAU VERITAS and NMMA.

STOCK CODE	BRIEF DESCRIPTION
HORN-MAR-2E01B	MARCO ELECTRIC HORN, BRASS, C/W COMPRESSOR, 24V, LLYODS
HORN-MAR-2E0B0-1	MARCO COMPRESSOR, 24VDC FOR 5403 HORN, C/W: LUBRICATOR

For more information or order,
please contact our Sales Team at
Tel: **(65) 6266-0788** or E-mail: **sales@noah.com.sg**

LLYODS Approved for VESSEL 20M < LENGTH < 75M

Approved whistle complete with white painted horn Ø 300 mm, electric valve and mounting accessories, for compressed air operation 6/12 bar. Meets COLREG 1972 IMO class III regulations.
Approvals: RINA, LLOYD'S REGISTER MCA, BUREAU VERITAS and NMMA.

STOCK CODE	BRIEF DESCRIPTION
HORN-MAR-3A01B	MARCO AIR HORN, C/W SOLENOID VALVE, 24VDC, LLYODS

LIGHT – NAVIGATIONAL

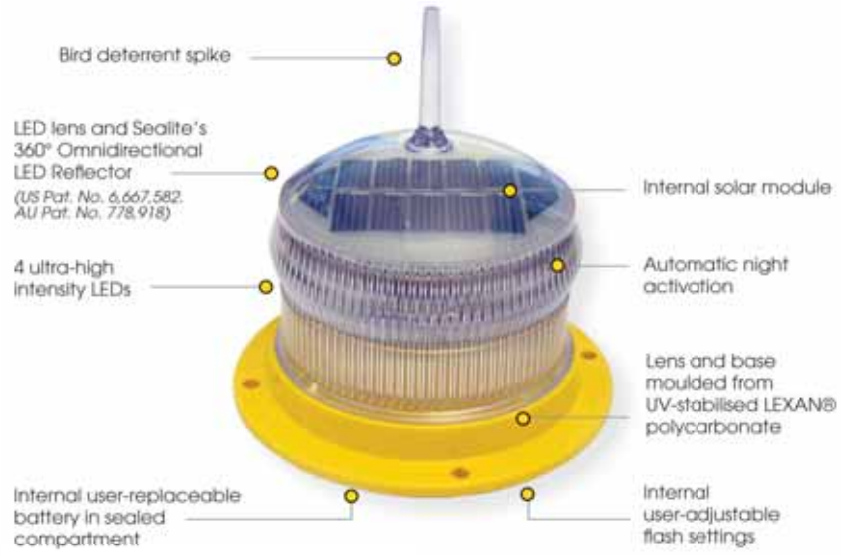

This equipment complies with requirements of the U.S. Coast Guard in 33 CFR part 66

SEALITE SL15
1-2NM+ SOLAR MARINE LIGHT

The Sealite SL15 1-2nm+ compact LED light is exceptional value and incorporates some of the most advanced technology available. In the tradition of Sealite lanterns, the SL15 is designed to be maintenance-free and have a service life of over 5 years.

The SL15 can be installed in minutes, and requires no operator intervention. The flash characters are user-adjustable, and the unit is supplied ready for immediate installation.

During daylight hours the solar module will charge the battery, and the lantern will automatically begin operation at dusk – once the ambient light threshold drops sufficiently.

The SL15 features the Sealite LED 360° Omnidirectional Reflector, which increases the intensity and uniformity of the horizontal output. The tough polycarbonate lens is specifically designed for use with LEDs, and incorporates an environment-friendly spike – deterring unwelcome bird life.

The internally housed battery is user-replaceable after years of reliable service.

The unit is sealed using an advanced ultrasonic weld, enabling a rugged and completely waterproof seal capable of prolonged and deep immersion (IP68).

STOCK CODE	BRIEF DESCRIPTION
LNAV-SL1-Z015	SEALITE, SL15 SOLAR LANTERN (PLEASE SPECIFY COLOUR WHEN ORDERING)

Specifications subject to change or variation without notice.
Intensity setting subject to solar availability.

For more information or order,
please contact our Sales Team at
Tel: **(65) 6266-0788** or E-mail: **sales@noah.com.sg**

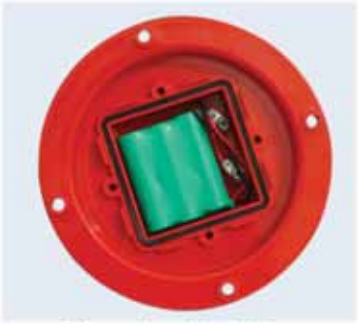

User replaceable battery

SL15 with optional ON/OFF switch (SL15-SW)

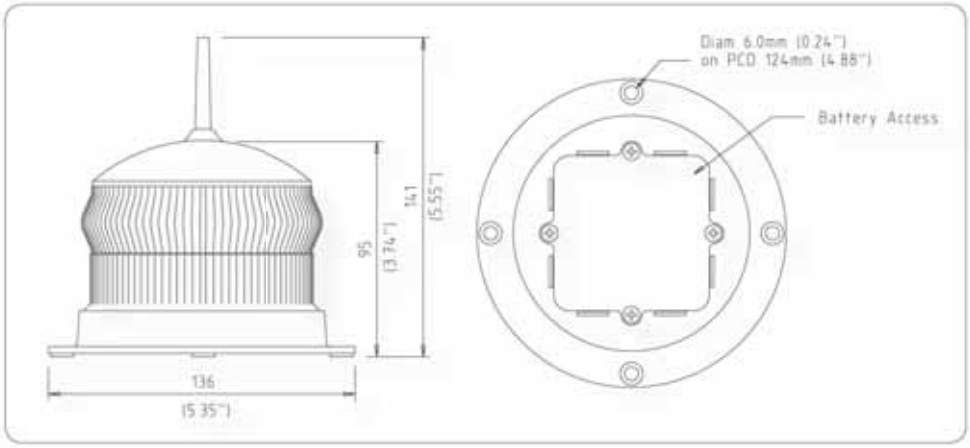

The Sealite Advantage

- User-adjustable flash characters
- User-replaceable battery in sealed battery compartment
- NiMH battery for long service life & wide temperature range
- Completely sealed & selfcontained using ultrasonic welding techniques
- Installs in minutes & operates maintenancefree for up to five years
- IP68 waterproof

SL15 solar light on FAD, Australia

SL15 marina lights, Vigo, Spain (photos courtesy of Marina Sea Initiatives)

This equipment complies with requirements of the U.S. Coast Guard in 33 CFR part 66

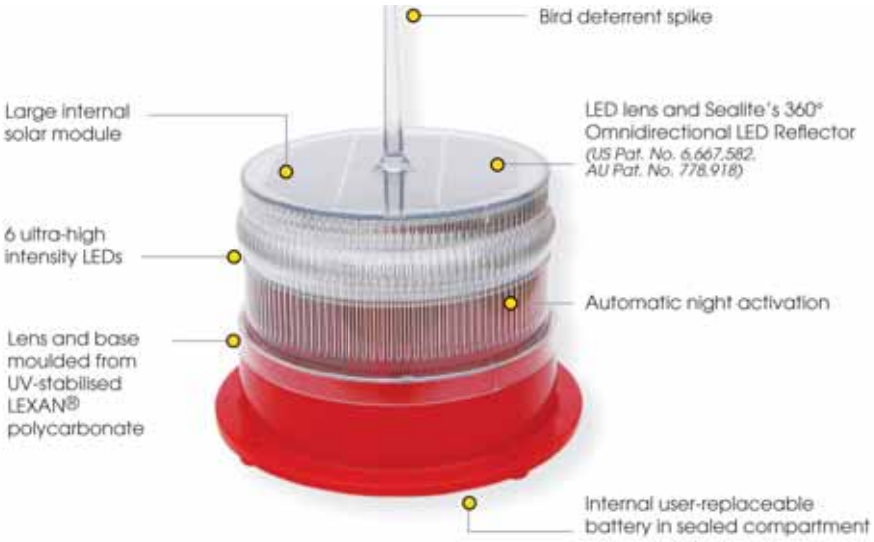

SEALITE SL60
2-3NM+ SOLAR MARINE LIGHT

The Sealite SL60 is the world's most popular and versatile 2-3nm+ solar marine light.

Made from tough, durable polycarbonate and using the latest high intensity LED's, no expense has been spared in the design and development of this lantern.

The SL60 can be installed in minutes, and requires no operator intervention. The flashcharacters are easily adjusted on-site by the user, and the lantern has a permanent ON/OFF switch for easy storage.

During daylight hours the solar module will charge the battery, and the lantern will automatically begin operation at dusk – once the ambient light threshold drops sufficiently.

The sealed battery compartment allows the battery to be replaced after years of service – don't throw the light away at the end of the battery service life. The unit is sealed using polycarbonate bonding compounds similar to those used by major automobile manufacturing companies.

Optional 200mm OD Base Pattern (SL60-LB)

The SL60 is available with optional large 200mm OD base pattern to suit installation requirements.

STOCK CODE	BRIEF DESCRIPTION
LNAV-SL1-060AG	SEALITE, SL60/G, GREEN, SOLAR LANTERN, ALLROUND
LNAV-SL1-060AR	SEALITE, SL60/R, RED, SOLAR LANTERN, ALLROUND
LNAV-SL1-060AW	SEALITE, SL60/W, WHITE, SOLAR LANTERN, ALLROUND
LNAV-SL1-060AY	SEALITE, SL60/Y, YELLOW, SOLAR LANTERN, ALLROUND
LNAV-SL1-060SG	SEALITE , SL60/G, GREEN, SOLAR LANTERN, SECTORED
LNAV-SL1-060SR	SEALITE , SL60/R, RED, SOLAR LANTERN, SECTORED
LNAV-SL1-060SW	SEALITE , SL60/W, WHITE, SOLAR LANTERN, SECTORED
LNAV-SL1-060SY	SEALITE , SL60/Y, YELLOW, SOLAR LANTERN, SECTORED

Specifications subject to change or variation without notice.
Intensity setting subject to solar availability.

For more information or order,
please contact our Sales Team at
Tel: **(65) 6266-0788** or E-mail: **sales@noah.com.sg**

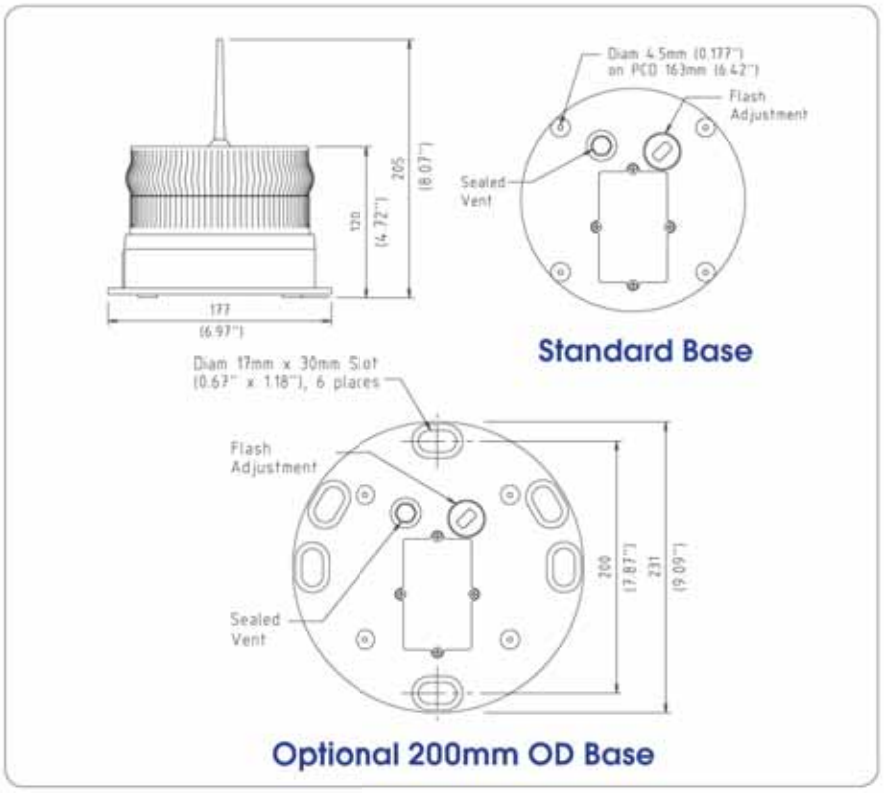

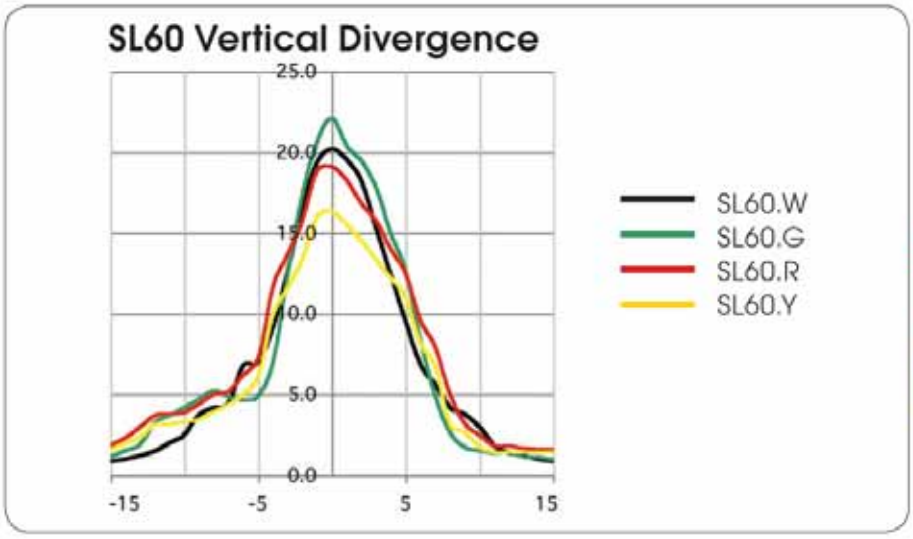

Candela (cd)	
	SL60
R	19.1
G	22.1
W	20.2
Y	16.3

The Sealite Advantage

- 256 IALA flash patterns, user-adjustable without the need for external devices
- User-replaceable battery in sealed battery compartment
- NiMH battery for long service life & wide temperature range
- 4 user-adjustable intensity settings
- ON/OFF storage switch
- IP68 waterproof Internal user-replaceable

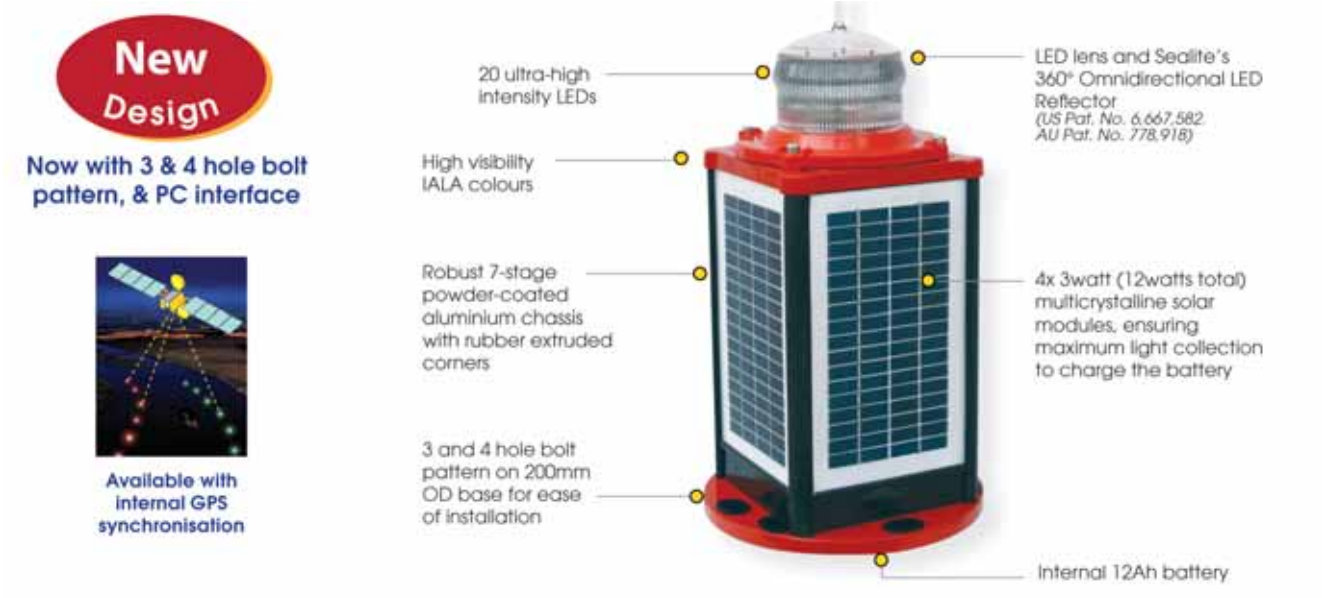

SEALITE SLC310
COMPACT 3-5NM+ SOLAR MARINE LANTERN

The SLC310 is a robust, completely self-contained 3-5nm+ Solar LED Lantern specifically designed to withstand the tough marine environment, providing years of reliable, lowmaintenance service. The 3 & 4 hole bolt pattern base fits directly onto existing 200mm OD industry standard mounts for ease of installation.

The chassis of the SLC310 is made from cast aluminium, subject to 7-stage powder-coating in high visibility IALA colours for daytime recognition, with UV-stabilisedrubber corners and gaskets providing a superior IP68 waterproof rating - the best in the industry.

Four (4) premium-grade solar modules are integrated into the assembly, and mounted to collect sunlight at all angles.
The unit is capable of producing any of 256 IALA recommended flash characters - fieldadjustable without the need for ancillary equipment.

The tough polycarbonate lens is specifically designed for use with LEDs, and incorporates an environment-friendly spike - deterring unwelcome bird life. The lens design also ensures that vessel operators clearly see the light from above, when passing the AtoN.

Optional PC Interface (SLC310-PC)
Sealite's new PC interface allows a host of features to be loaded onto the lantern, including automatic effective intensity calculations, adjustable on/off LUX levels and custom flash codes. Users can choose between Schmidt-Clausen, Allard, Blondel-Rey-Douglas, and Allard-Ohno-Couzin (100 pulse) effective intensity settings.

Optional High Intensity Model (SLC310-HI)
The SLC310 is available in 2 peak intensity modes where solar radiation permits. For solar sizing please refer to the Sealite Power Calculator.

Optional GPS Synchronisation (SLC310-GPS & SLC310-HI-GPS)
Sealite's SLC310 is also available with optional GPS synchronisation enabling users to clearly mark channels, ports, rivers and entrances, marinas, aquaculture installations and exclusion zones with independent lanterns which flash in synchronisation.

When lanterns flash in synchronisation, they can be clearly distinguished from other navaids and confusing background lighting.

STOCK CODE	BRIEF DESCRIPTION
LNAV-SL1-Z310	SEALITE, SLC310 SOLAR LANTERN WITH SOLAS PANEL (PLEASE SPECIFY COLOUR WHEN ORDERING)

Specifications subject to change or variation without notice.
Intensity setting subject to solar availability.

For more information or order,
please contact our Sales Team at
Tel: **(65) 6266-0788** or E-mail: **sales@noah.com.sg**

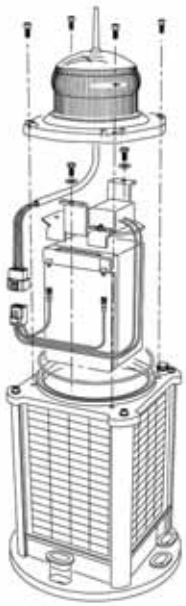

Convenient user-replaceable battery

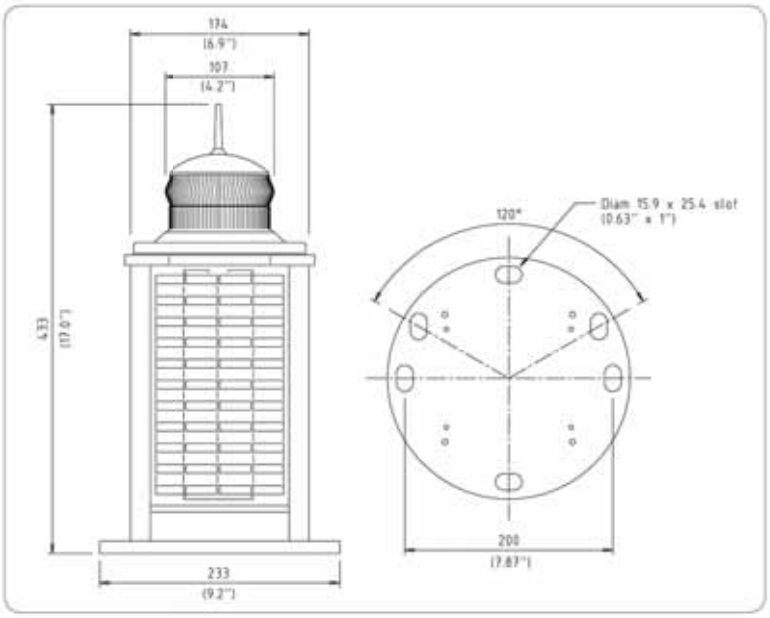

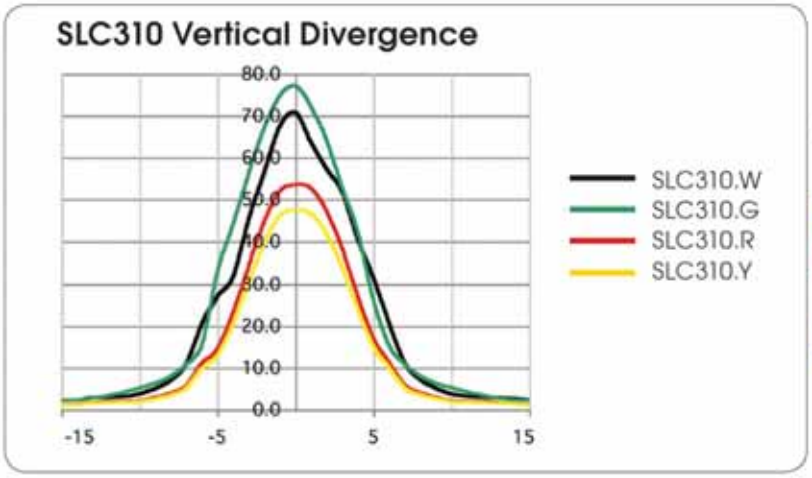

Candela (cd)		
	SLC310	SLC310-HI
R	53.6	94
G	77.2	125
W	70.8	116
Y	47.5	83

The Sealite Advantage

- Simplicity of design ensures ease of maintenance in the field
- Heavy-duty aluminium construction
- All components userreplaceable in the unlikely event of damage
- 200mm OD base pattern for immediate installation on existing structures
- User-replaceable battery
- 256 IALA flash patterns
- Tempered glass solar modules for peak efficiency
- IP68 waterproof
- Full 3 year warranty

Available with GPS sync, RF comm-sync, radio control or GSM control

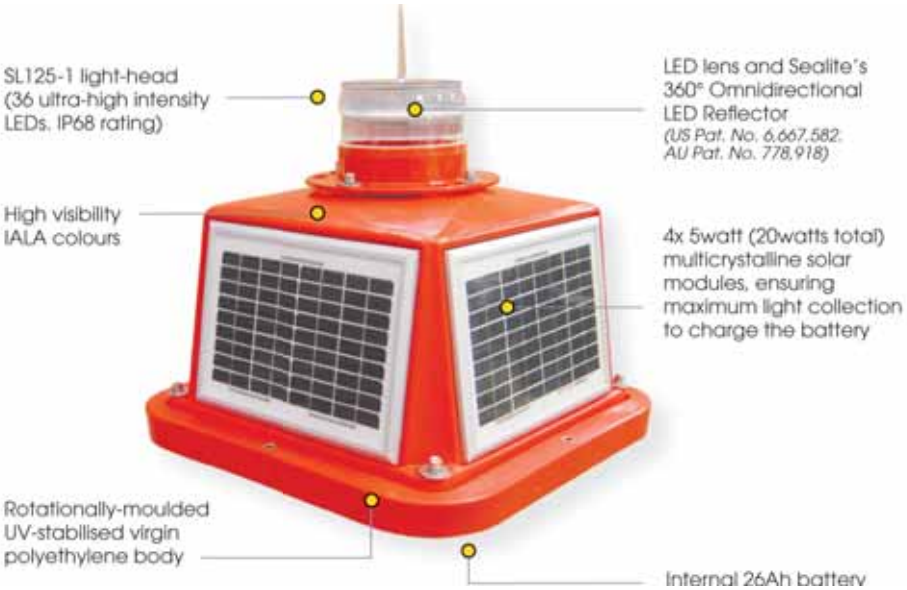

SLC400
COMPACT 4-6NM+ SOLAR MARINE LANTERN

The SLC400 is a completely self-contained 4-6nm+ Solar LED Marine Lantern designed for a range of low-maintenance applications.

The light boasts a large internal waterproof battery compartment, a 36 LED flasher unit, and 4 premium-grade 5watt solar modules mounted to collect sunlight at all angles.

The SLC400 is moulded from UV-stabilised virgin polyethylene, providing enormous impact and weather resistance, in addition to high visibility IALA colours.

The tough polycarbonate lens is specifically designed for use with LEDs, and incorporates an environment-friendly spike - deterring unwelcome bird life. The lens design also ensures that vessel operators clearly see the light from above, when passing the AtoN. The user-friendly 2-piece design allows the lantern to be opened for convenient battery inspection or replacement whilst the base remains fixed to the supporting structure.

Optional Flash Synchronisation via RF Comm Sync (SLC400-CS) or GPS (SLC400-GPS)
The SLC400 may be fitted with optional comm sync RF module for short range flash synchronisation (SLC400-CS). For flash synchronisation of lanterns installed over longer ranges, a GPS module may be fitted (SLC400-GPS).

When lanterns flash in synchronisation they can be clearly distinguished from other navaids and confusing background lighting – ideal for rivers, marina entrances, channel marking and aquaculture.

Optional GSM Remote Monitoring & Control (SLC400-GSM)
The SLC400 may also be fitted with GSM remote monitoring and control capabilities - enabling users to access real-time diagnostics data and change lantern settings via cellphone or PC interface.

Optional Remote Radio Control (SLC400-RC)
Radio control may be fitted to the SLC400 model enabling users to remotely modify the setup of their lantern via handheld radio controller (SL-RC-2.4).

STOCK CODE	BRIEF DESCRIPTION
LNAV-SL1-400AG	SEALITE, SLC400/G, GREEN, SOLAR LANTERN,WITH SOLAS PANEL (PLEASE SPECIFY COLOUR WHEN ORDERING)

Specifications subject to change or variation without notice.
Intensity setting subject to solar availability.

For more information or order, please contact our Sales Team at
Tel: **(65) 6266-0788** or E-mail: **sales@noah.com.sg**

Convenient battery replacement

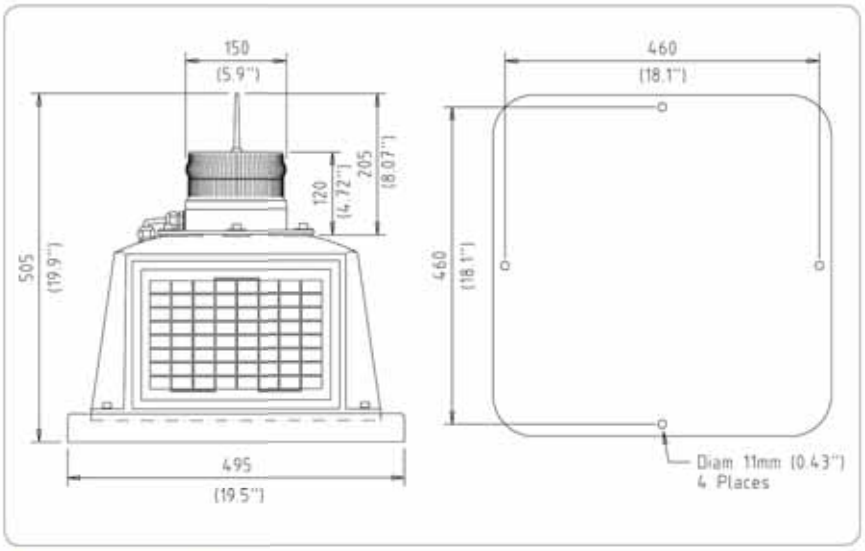

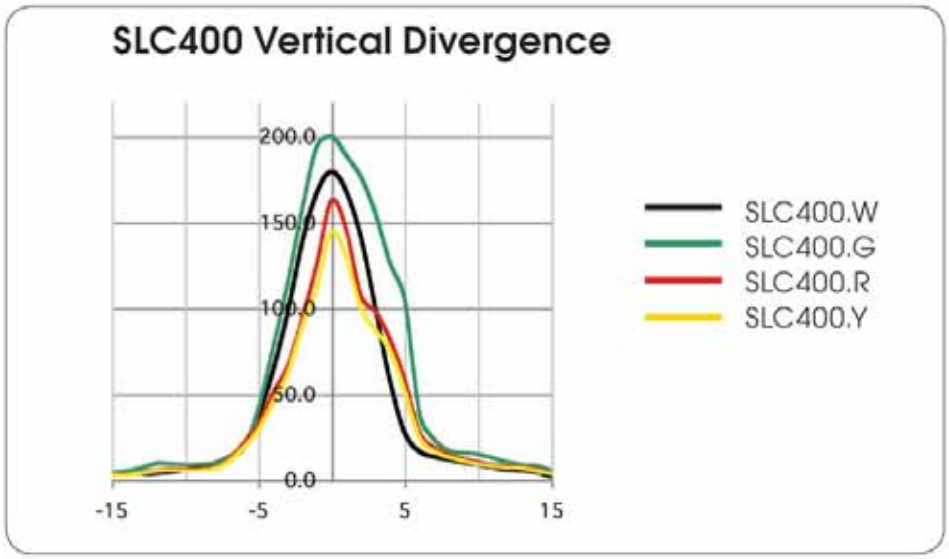

Candela (cd)	SLC400
R	163
G	200
W	180
Y	145

The Sealite Advantage

- Complete unit - ready for immediate installation
- Impact & weather resistant polyethylene
- 256 IALA flash patterns, user-adjustable without the need for external devices
- Tempered glass solar modules for peak efficiency
- Vertical light emissions to maintain visibility when passing adjacent to light

Available with GPS sync, RF comm-sync, radio control or GSM control

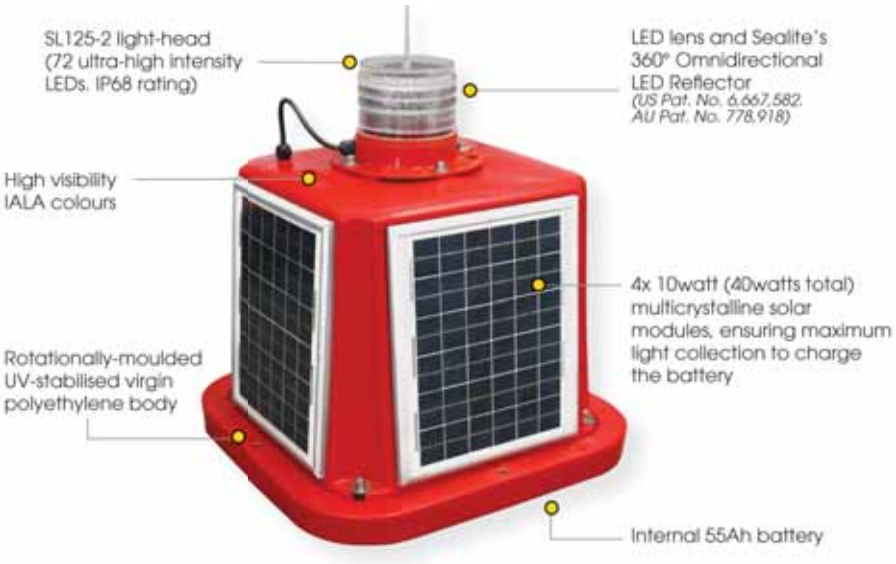

SLC500
COMPACT 5-7NM+ SOLAR MARINE LANTERN

The SLC500 is a completely self-contained 5-7nm+ Solar LED Marine Lantern designed for a range of low-maintenance applications.

The light boasts a large internal battery compartment, a multiple tiered SL125 LED light-head, and 4 premium-grade 10watt solar modules mounted to collect sunlight at all angles.

The SLC500 is moulded from UV-stabilised virgin polyethylene, providing enormous impact and weather resistance, in addition to high visibility IALA colours.

The tough polycarbonate lens is specifically designed for use with LEDs, and incorporates an environment-friendly spike - deterring unwelcome bird life. The lens design also ensures that vessel operators clearly see the light from above, when passing the AtoN.

The user-friendly 2-piece design allows the lantern to be opened for convenient battery inspection or replacement whilst the base remains fixed to the supporting structure.

Optional Flash Synchronisation via RF Comm Sync (SLC500-CS) or GPS (SLC500-GPS)
The SLC500 may be fitted with optional comm sync RF module for short range flash synchronisation (SLC500-CS). For flash synchronisation of lanterns installed over longer ranges, a GPS module may be fitted (SLC500-GPS).

When lanterns flash in synchronisation they can be clearly distinguished from other navaids and confusing background lighting – ideal for rivers, marina entrances, channel marking and aquaculture.

Optional GSM Remote Monitoring & Control (SLC500-GSM)
The SLC500 may also be fitted with GSM remote monitoring and control capabilities - enabling users to access real-time diagnostics data and change lantern settings via cell-phone or PC interface.

Optional Remote Radio Control (SLC500-RC)
Radio control may be fitted to the SLC500 model enabling users to remotely modify the setup of their lantern via handheld radio controller (SL-RC-2.4).

STOCK CODE	BRIEF DESCRIPTION
LNAV-SL1-Z500	SEALITE, SLC500 SOLAR LANTERN WITH SOLAS PANEL (PLEASE SPECIFY COLOUR WHEN ORDERING)

Specifications subject to change or variation without notice.
Intensity setting subject to solar availability.

For more information or order,
please contact our Sales Team at
Tel: **(65) 6266-0788** or E-mail: **sales@noah.com.sg**

Convenient battery replacement

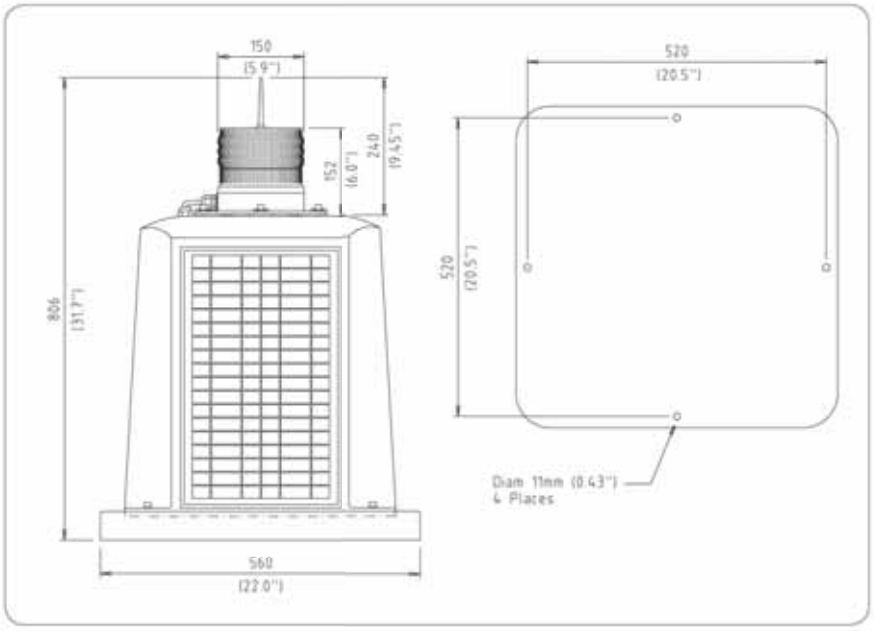

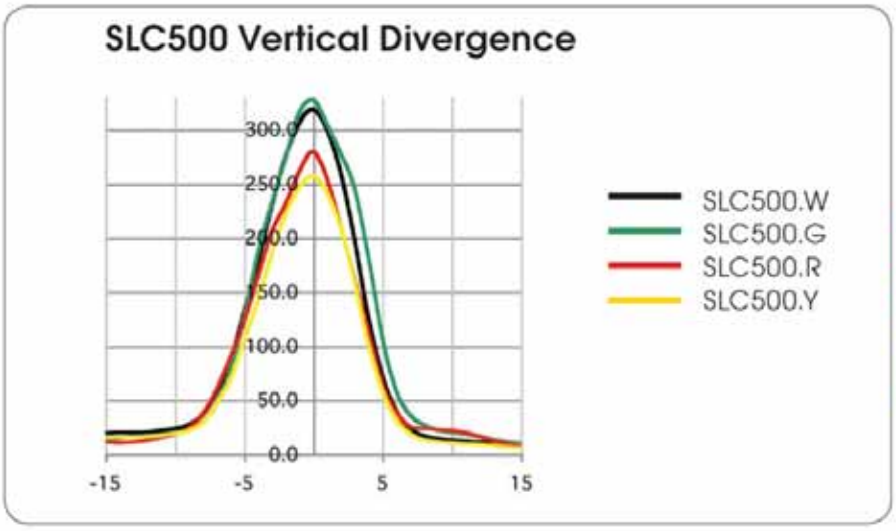

Candela (cd)	SLC500
R	280
G	328
W	319
Y	257

The Sealite Advantage

- Complete unit - ready for immediate installation
- Impact & weather resistant polyethylene
- 256 IALA flash patterns, user-adjustable without the need for external devices
- Tempered glass solar modules for peak efficiency
- Vertical light emissions to maintain visibility when passing adjacent to light

Available with GPS sync, RF comm-sync, radio control or GSM control

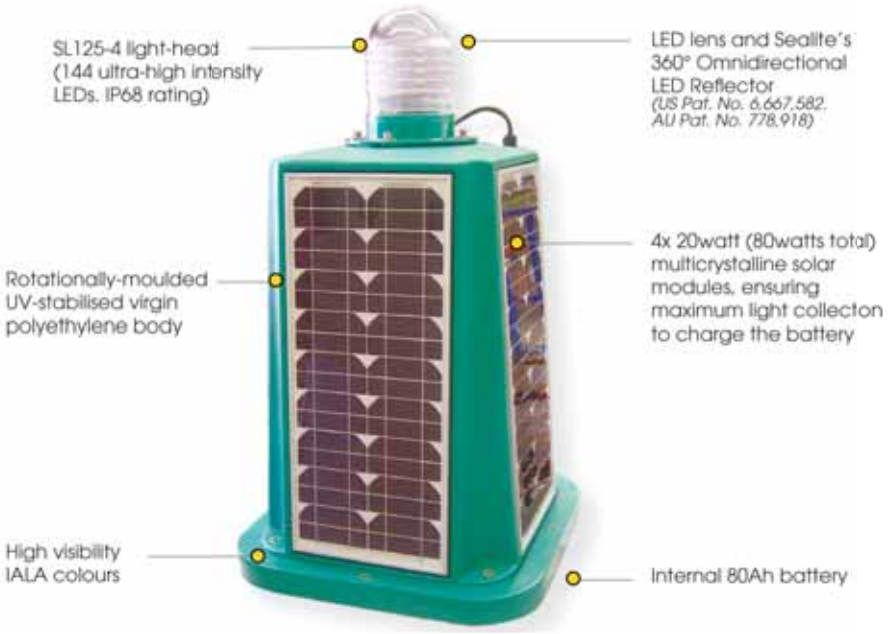

SLC600
COMPACT 6-9NM+ SOLAR MARINE LANTERN

The SLC600, one of the world's largest self-contained LED lantern, is a 6-9nm+ Solar LED Marine Lantern designed for a range of low-maintenance applications. The large solar array make this lantern perfect for low sunlight regions.

The light boasts a large internal battery compartment, a multiple tiered SL125 LED light-head, and 4 premium-grade 20watt solar modules mounted to collect sunlight at all angles.

The SLC600 is moulded from UV-stabilised virgin polyethylene, providing enormous impact and weather resistance, in addition to high visibility IALA colours.

The tough polycarbonate lens is specifically designed for use with LEDs, and also enables vessel operators to clearly see the light from above, when passing the AtoN. The user-friendly 2-piece design allows the lantern to be opened for convenient battery inspection or replacement whilst the base remains fixed to the supporting structure.

Optional Flash Synchronisation via RF Comm Sync (SLC600-CS) or GPS (SLC600-GPS)
The SLC600 may be fitted with optional comm sync RF module for short range flash synchronisation (SLC600-CS). For flash synchronisation of lanterns installed over longer ranges, a GPS module may be fitted (SLC600-GPS).

When lanterns flash in synchronisation they can be clearly distinguished from other navaids and confusing background lighting – ideal for rivers, marina entrances, channel marking and aquaculture.

Optional GSM Remote Monitoring & Control (SLC600-GSM) and AIS Integration (SLC600-AIS)
The SLC600 may also be fitted with GSM remote monitoring and control capabilities - enabling users to access real-time diagnostics data and change lantern settings via cellphone or PC interface.

AIS integration enables remote monitoring of the SLC600 as well as crucial Message 21 information to be broadcast to mariners within the region.

Optional Remote Radio Control (SLC600-RC)
Radio control may be fitted to the SLC600 model enabling users to remotely modify the setup of their lantern via handheld radio controller (SL-RC-2.4).

STOCK CODE	BRIEF DESCRIPTION
LNAV-SL1-Z600	SEALITE, SLC600 SOLAR LANTERN WITH SOLAS PANEL (PLEASE SPECIFY COLOUR WHEN ORDERING)

Specifications subject to change or variation without notice.
Intensity setting subject to solar availability.

For more information or order,
please contact our Sales Team at
Tel: **(65) 6266-0788** or E-mail: **sales@noah.com.sg**

Convenient battery replacement

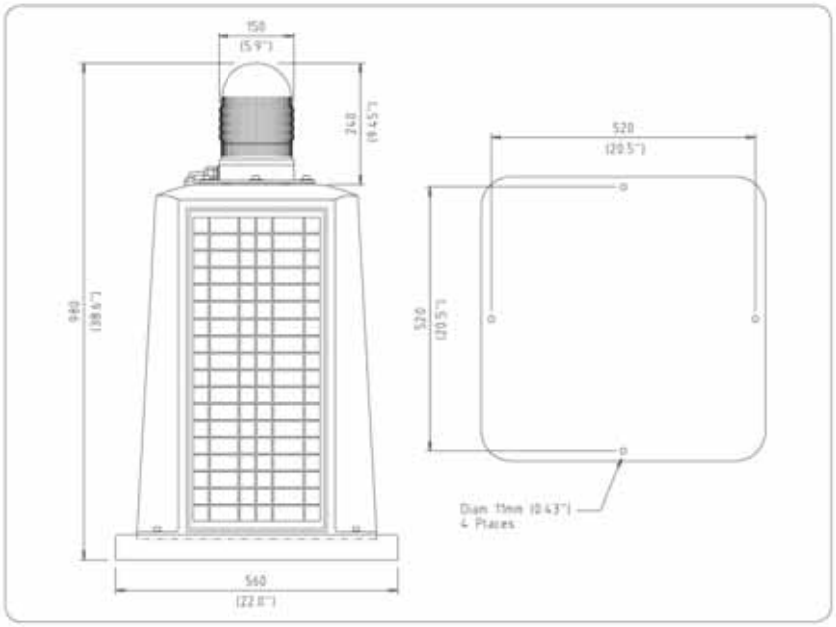

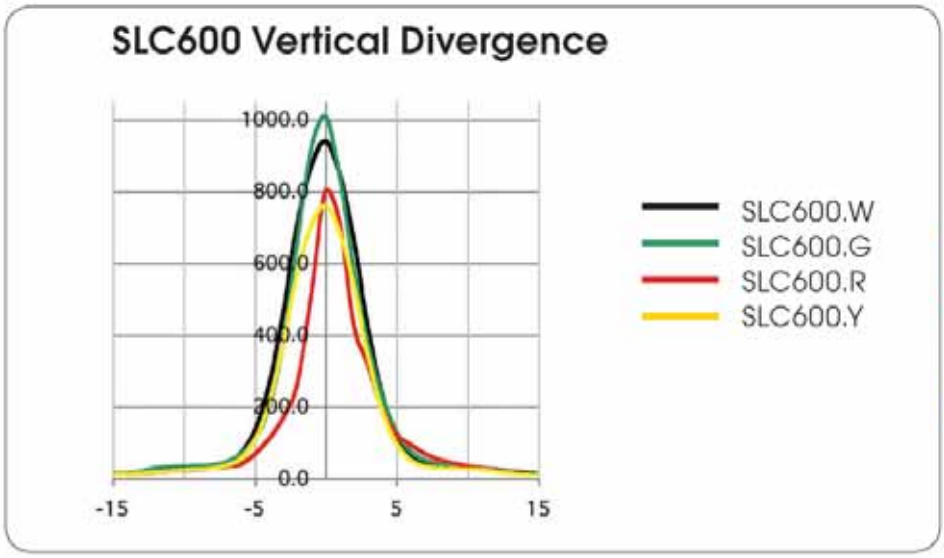

Candela (cd)	SLC600
R	798
G	1010
W	940
Y	760

The Sealite Advantage

- Complete unit - ready for immediate installation
- Impact & weather resistant polyethylene
- 256 IALA flash patterns, user-adjustable without the need for external devices
- Tempered glass solar modules for peak efficiency
- Vertical light emissions to maintain visibility when passing adjacent to light

BARGESAFE™
LED BARGE LIGHT

The Sealite BargeSafe™ range of LED barge lights are certified to UL 1104 and COLREG-72 compliant with >3nm visible range.

The LED barge light is one of the most advanced in its class, and incorporates a host of innovative features designed to make the unit extremely user-friendly.

The world-class LED lens is designed by Sealite and achieves precise intensity and sectoring requirements from a single LED light source. This design helps achieve a lower operational current compared with alternate LED barge lights - making the unit ultra efficient and offering a battery run time of up to 45 nights.

The light will run from a 6v or 12v dry-cell, or can be supplied with an advanced rechargeable battery pack and charge controller. Advanced onboard circuitry incorporates a DC/DC converter which will maintain the required light source intensity over varying battery voltage.

The barge light casing and handle are injected moulded from UV-stabilised polycarbonate – offering enormous impact resistance and long operational life. The casings are coloured for easy identification of light output colour.

A magnetic base provides strong fixing in position to the barge deck.

All Round 360° Light Configuration (BL-3-360)
The Sealite BargeSafe™ is also available as a 360 degree all round light with either flashing or steady-on flash characteristics.

Optional Peep-light (BL-PL)
Sealite BargeSafeTM is available with an optional Peep-Light for the BLY-3 masthead light to assist in the navigation of in-land waterways. This blue steady-on light is used to guide mariners when maneuvering the barge into dock and to help determine the swing of the bow when viewed from the stern. The BL-PL comes standard with 12v rechargeable battery connection.

STOCK CODE	BRIEF DESCRIPTION
LNAV-SL1-ZBL	SEALITE, BARGESAFE, LED BARGE LIGHT, >3NM VISIBLE RANGE (PLEASE SPECIFY COLOUR WHEN ORDERING)

Specifications subject to change or variation without notice.
Intensity setting subject to solar availability.

NOAH
For more information or order, please contact our Sales Team at
Tel: **(65) 6266-0788** or E-mail: **sales@noah.com.sg**

The Sealite Advantage

- UL 1104 certified
- COLREG-72 compliant
- LED technology
- Precise light sectoring achieved via Sealite's world-class in-house designed lens
- 3nm visible range
- Robust
- Installs in seconds
- Low power consumption
- Lightweight
- IP67 waterproof

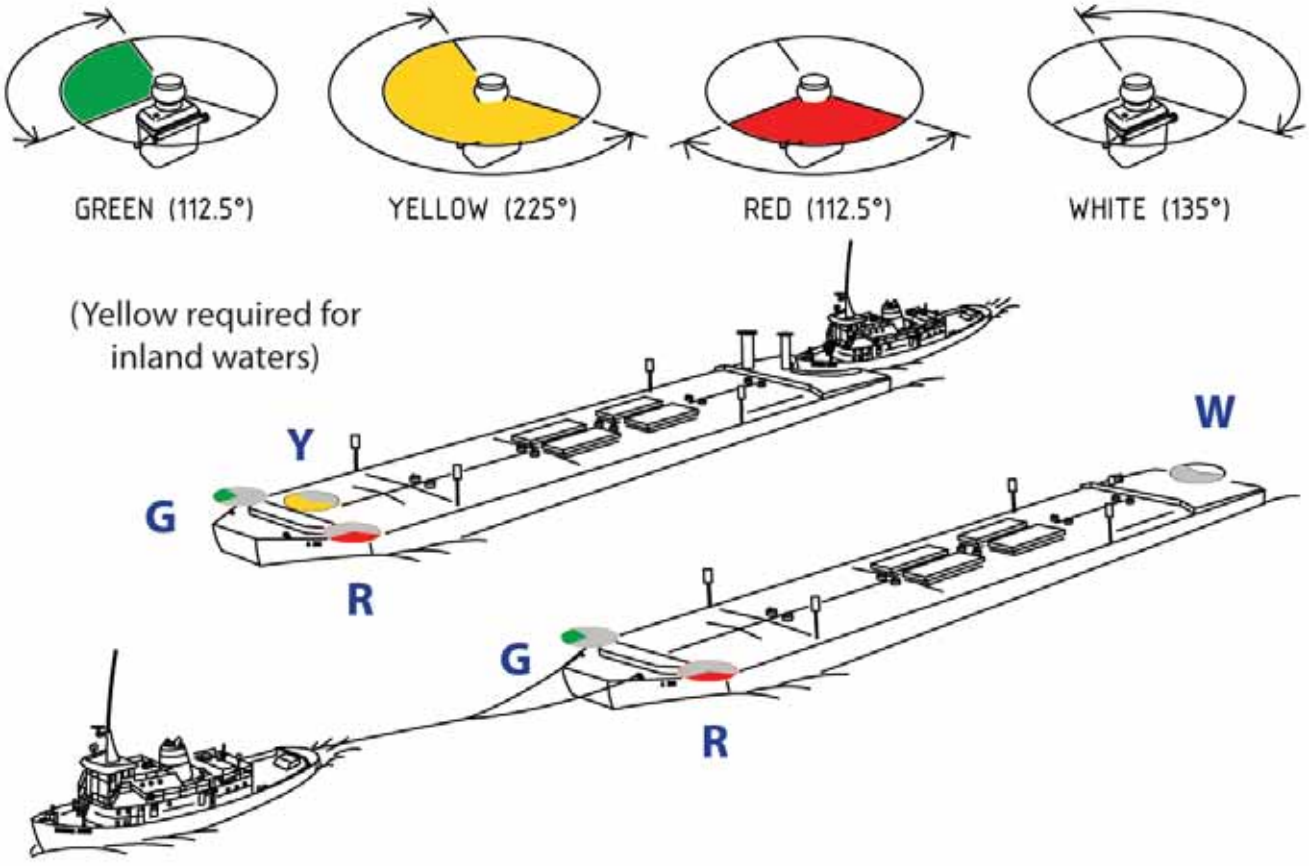

HELMSMAN SEATS

CLEEMANN PILOT CHAIRS

CLEEMANN CHAIR-SYSTEMS

Recommended application
Large ships such as:
Container, Tanker, MPC, Ro-Ro, Ferry.

Profile
This popular and highly-functional helmsman chair offers high comfort to the user. All functions can be operated while seated. The chairs are designed according to the ergonomical and technical requirements of leading classification companies. Also available as »ergo-package« with lumbar support and comfort seat cushion for special demands.

Serial features
- adjustable headrest
- foldable / angle adjustable comfort armrests
- backrest adjustment 45°
- fore / aft adjustment 190 mm
- lumbar support (ergo-package)
- swivel-mechanism 360°
- angle adjustment of the seat top
- strong lifting column / salt water resistant aluminium
- shock-absorber in the column
- foldable, angle-adjustable footrest / swivels together with the seat-top
- standard-upholstery: fabric black (Trevira CS) other materials and colours on request

Versions
Sitting heights (fixed):
all heights possible

sitting heights (lift):
D = 558 - 718 mm
E = 618 - 838 mm
F = 708 - 1018 mm

STOCK CODE	BRIEF DESCRIPTION
SEAT-CLM-CALD1	CLEEMANN, NAUTIC THE CLASSIC, BLACK SYNTHETIC LEATHER WITH PEDESTAL

NOAH
For more information or order,
please contact our Sales Team at
Tel: **(65) 6266-0788** or E-mail: **sales@noah.com.sg**

STOCK CODE	BRIEF DESCRIPTION
SEAT-CLM-ZCBXX	CLEEMANN PILOT CHAIR, NAUTIC PRO

NAUTIC PRO XXL

The Mastermind

Profile

Cleemanns new development: the pilot-chair *Nautic pro XXL* with fully integrated controls in the armrest. The special armrest-consoles are prepared to enclose all necessary control and navigation instruments such as joysticks, switch buttons and even screen casings. This permits relaxed manouvering without any loss of comfort. The custum built armrests are designed and manufactured individually to include the instruments provided or specified by the customer. We look forward to meeting your special requirements.

STOCK CODE	BRIEF DESCRIPTION
SEAT-CLM-ZCCXX	CLEEMANN PILOT CHAIR, NAUTIC PRO XXL

NOAH

For more information or order,
please contact our Sales Team at
Tel: **(65) 6266-0788** or E-mail: **sales@noah.com.sg**

CLEEMANN DECK SLIDE

Our deckrails have a specially developed sliding-system for smooth, fast and easy moving.

In addition to this, the slidingrails have closed ends that save time while fitting to the floor. There is no extra-frame needed to protect the system during original installation.

This also keeps dirt out of the system.

Profile

Our famous deckrails – made of a light-weight but strong combination of aluminium and stainless steel – offer a wide range of possibilities to increase the comfort and safety »on deck« of nearly every wheelhouse. They also allow movement of the chair into the desired position while seated.

STOCK CODE	BRIEF DESCRIPTION
SEAT-CLM-ZRFXX	CLEEMANN DECK SLIDE, F-SERIES
SEAT-CLM-ZRCXX	CLEEMANN DECK SLIDE, C-SERIES

Please specify length when ordering.

Profile

Cleemann's brand-new range of passenger seats have been designed in order to ensure the most comfortable and safe travelling on board.

Certified by DNV (12G /dynamic test) and equipped with fire-resistant components, our seats correspond to the highest standards of quality and safety.

Optional accessories

- armrests
- seat-belts
- ashtray
- foldable backrest
- newspaper-net
- food-tray
- life-jacket holder
- cupholder

STOCK CODE	BRIEF DESCRIPTION
SEAT-CLM-ZSAXX	CLEEMANN PASSENGER SEAT, THE VOYAGER

NOAH

For more information or order,
please contact our Sales Team at
Tel: **(65) 6266-0788** or E-mail: **sales@noah.com.sg**

SENGNI HELMSMAN SEAT & DECK RAIL

Sengni helmsman seat is designed to high standards of ergonomics and provides a stable lateral support. This seat is mounted on a 100mm dia telescoping column which adjusts easily to the required height.

SEAT FEATURES:

- High backrest and strong fittings
- Headrest
- Armrest, adjustable and foldable
- Backrest, tilt able
- Seat Cushion – PUR foam for extended seating
- Upholstery: Black synthetic leather
- Forward/Aft adjustment
- Suspension c/w 80mm height adjustable and angle adjustment for the seat top

PEDESTAL (ADJUSTABLE) FEATURES:

- Pedestal strong lifting column
- Height: 600mm adjustable 100mm
- Swivel mechanism 360 degree rotation and lockable in 12 positions
- Footrest: Foldable, height adjustable/swivels together with seat top

DECK RAIL FEATURES:

- Special sliding system for smooth and fast moving
- Closed ends for easy mounting
- Recess and surface mount
- Available Length: 1000mm, 2000mm, 3000mm
- Control of the sliding position fitted to the chair

STOCK CODE	BRIEF DESCRIPTION
PICK-SNF-SB1	SENGNI, HELMSMAN CHAIR C/W: HEADREST, PEDESTAL & FOOTREST
SEAT-SNF-SB1	SENGNI, HELMSMAN CHAIR, HIGH BACK C/W: HEADREST
SEAT-SNF-SPDLS	SENGNI, PEDESTAL 600MM, 100MM ADJUSTABLE WITH 360 DEG ROTATION
SEAT-SNF-STKF2	SENGNI, DECKSLIDE, 2,000MM LGTH, SURFACE MOUNT, FOOT CONTROL
SEAT-SNF-STKM3	SENGNI, DECKSLIDE, 3,000MM LGTH, SURFACE MOUNT FOOT CONTROL

WHEELHOUSE/BRIDGE ACCESSORIES

Hanseatic Instruments Hamburg

HANSEATIC BAROMETER

155/0111 Barometer,
brass case, polished without hinge & shutter, 5“ dial, Back opening
Dimension: Backflange 155mm Dia
Scale 118mm Dia
Height 43mm

180/0586 Barometer,
brass case, polished with solid cast glass bezel & screw locking, 6“ dial with Thermo, Front Opening
Dimension: Backflange 180mm Dia
Scale 140mm Dia
Height 70mm

155/0611 Clock,
brass case, polished without hinge & shutter, 5“ dial, back opening
Dimension: Backflange 155mm Dia
Scale 118mm Dia
Height 43mm

220/8111 Clock,
brass case, polished with hinge & shutter, Quartz movements with start-stop switch, 6“ dial, Front opening
Dimension: Backflange 220mm Dia
Scale 150mm Dia
Height 60mm

NOAH
For more information or order,
please contact our Sales Team at
Tel: **(65) 6266-0788** or E-mail: **sales@noah.com.sg**

220/8111FS Radio-Clock,
brass case, polished with hinge & shutter, Quartz movements with start-stop switch, 6“ dial, Front opening
Dimension: Backflange 220mm Dia
Scale 150mm Dia
Height 60mm

155/0911 Clinometer, brase case, polished, oil damped, 5“ dia.
Dimension: Backflange 155mm
Scale 118mm
Height 43mm“

258/3250 PRECISION BAROGRAPH,
8 diaphargms with oil suspension, weekly recordings, Quartz movements,
Dimension: 240 x 150 x 150mm
Measuring range: 955-1060 hPa
Weight: About 2.2kg

160/0811 ECO Board Chronometer,
precision without compromise, accurate quartz battery movement with start-stop switch. The natural mahogany is varnished with a special lacquer to withstand roughest conditions on board. With Short Test Certificate.
Dimension: 160 x 160 x 85mm“

STOCK CODE	BRIEF DESCRIPTION
WHAC-HAN-BARO1-	HANSEATIC P/N: 155/0111 BAROMETER, 5" DIAL
WHAC-HAN-BARO2-	HANSEATIC P/N: 180/0586 BAROMETER, 6" DIAL
WHAC-HAN-CLOK1-	HANSEATIC P/N: 155/0611 MARINE CLOCK, 5" DIAL
WHAC-HAN-CLOK2-	HANSEATIC P/N:220/8111 MARINE CLOCK, 6" DIAL
WHAC-HAN-CLOK2-R	HANSEATIC P/N: 220/8111FS MARINE RADIO CLOCK, 6" DIAL
WHAC-HAN-CLIN1-	HANSEATIC P/N: 155/0911 CLINOMETER, 5" DIAL
WHAC-HAN-BARG1-	HANSEATIC P/N: 258/3250 BAROGRAPH C/W 1 YEAR PAPER
WHAC-HAN-CHRO1-	HANSEATIC P/N: 160/0811 CHRONOMETER C/W CERTIFICATE

NAVIGATIONAL AIDS & WHEELHOUSE

STOCK CODE	BRIEF DESCRIPTION
WHAC-CHN-BAL24	BLACK BALL, 24'' NET TYPE
WHAC-DFG-BELL1	CHINA, 12" (300MM) BELL, BRASS C/W STRIKER, CCS APPROVED
WHAC-CHN-CLIN1	CLINOMETER QXY 1 , 6" PVC PENDULUM TYPE, 45 - 0 - 45 DEG
WHAC-CHN-CYLIN	BLACK CYLINDRICAL, NET TYPE
WHAC-CHN-CYLIN	BLACK DIAMOND, 24'' NET TYPE

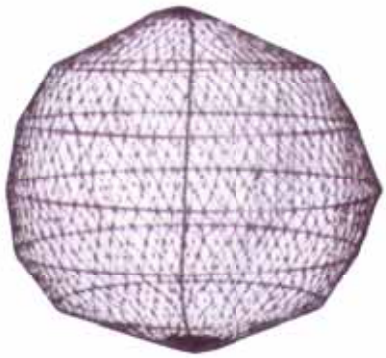

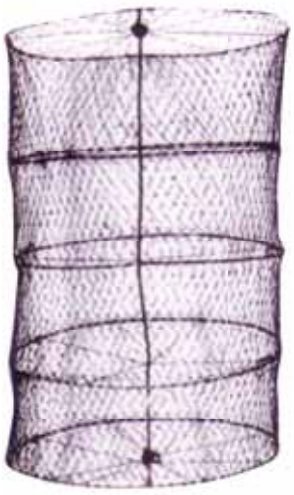

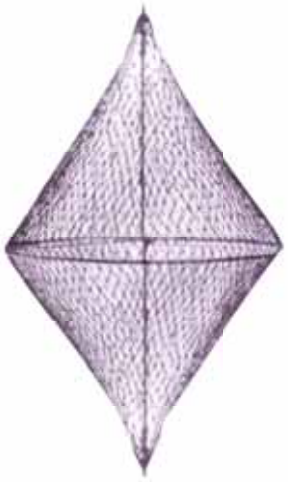

NOAH

For more information or order,
please contact our Sales Team at
Tel: **(65) 6266-0788** or E-mail: **sales@noah.com.sg**

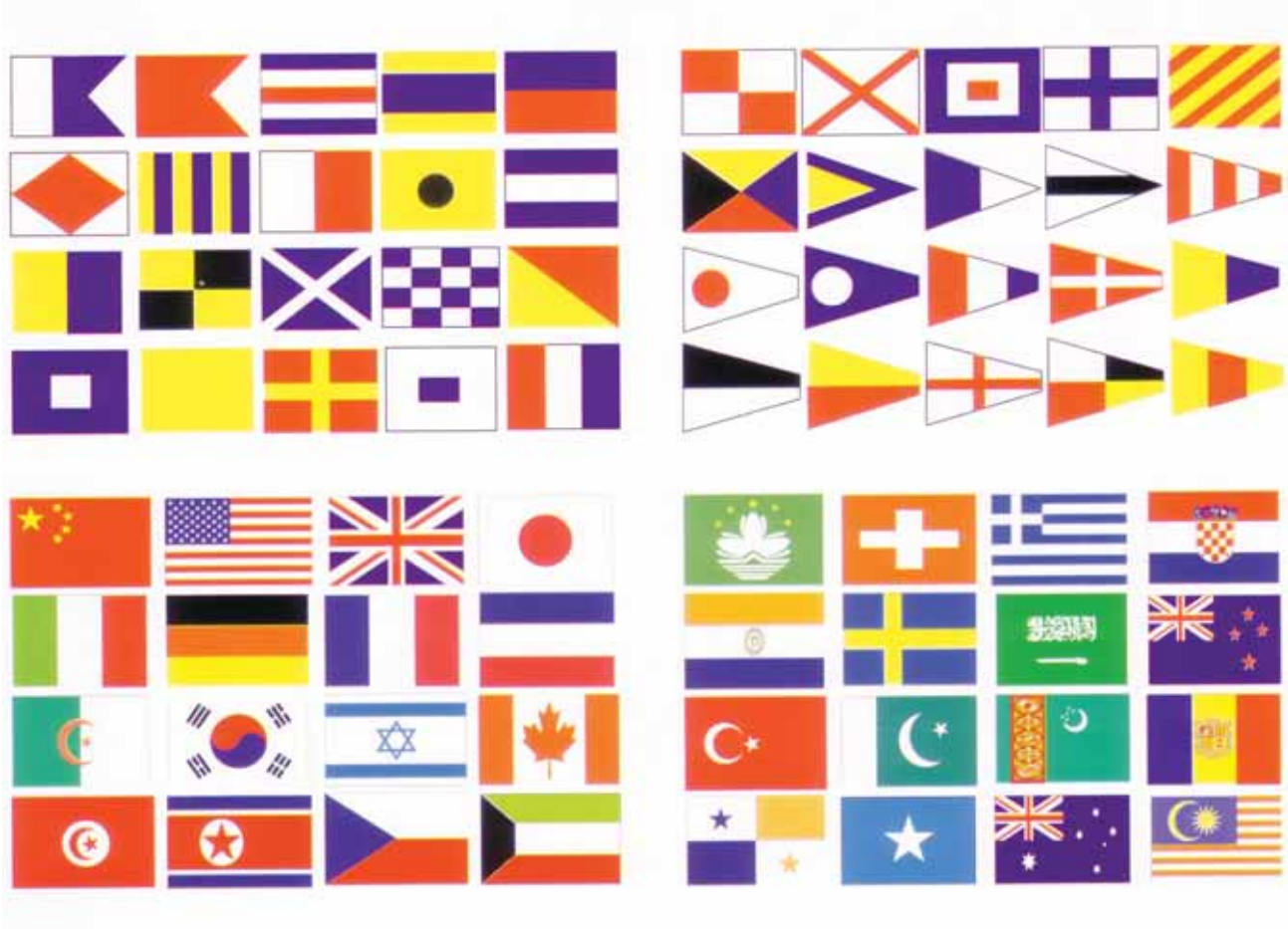

INTERNATIONAL CODE FLAG & SEXTANT

STOCK CODE	BRIEF DESCRIPTION
WHAC-CHN-ICF01	INTERNATIONAL CODE FLAG 1.5FT X 2FT, 40PCS PER SET (45CM X 60CM)
WHAC-CHN-ICF02	INTERNATIONAL CODE FLAG 2FT X 3FT, 40PCS PER SET (60CM X 90CM)
WHAC-CHN-SEXT	SEXTANT C/W BOX & CERTIFICATE

MARINE WIPER

HEPWORTH PANTOGRAPH

HEPWORTH · 2Nm

Light duty window wiper ideal for the small boat market.

- A compact lightweight unit
- Pantograph and pendulum
- Arms with blades up to 20ins. (510mm) are available
- Variable arc model
- 12 and 24 volt DC
- Single speed
- Self-parking facility
- Insulated earth return is optional
- Operated by a toggle switch

STOCK CODE	BRIEF DESCRIPTION
WIPE-HEP-2NMA2	HEPWORTH, 2NM MARINE WIPER MOTOR 12V 80MM LINER
WIPE-HEP-2NMB1	HEPWORTH, 2NM MARINE WIPER MOTOR 24V 110MM LINER

HEPWORTH · 30Nm

Medium duty window wiper ideal for average speed vessels with medium sized windows.

- A compact and robust unit
- Pantograph and pendulum
- Arms with blades up to 28ins. (710mm) are available
- Fixed arc or variable arc model
- 12 and 24 volt DC
- Two speeds
- Self-parking facility
- Insulated earth return and EMC filter are standard
- Operated by various controls including a rotary switch, toggle switch, rocker switch or a multi-speed / function control system

STOCK CODE	BRIEF DESCRIPTION
KITT-HEP-30NB1	HEPWORTH, 30NM MARINE WIPER MOTOR 24VDC STANDARD LINER

NOAH

For more information or order,
please contact our Sales Team at
Tel: **(65) 6266-0788** or E-mail: **sales@noah.com.sg**

HEPWORTH · 50Nm

Heavy duty window wiper ideal for average to high speed vessels.

- Pantograph and pendulum
- Low maintenance
- Silent running
- Arms with blades up to 39ins. (1000mm) are available for average speed vessels
- Arms with blades up to 24ins. (610mm) are available for high speed vessels
- Fixed arc or variable arc model
- 12 and 24 volt DC
- Two speeds
- Self-parking facility
- Insulated earth return and EMC filter are standard
- Operated by various controls including a rotary switch, toggle switch, rocker switch or a multi-speed / function control system

STOCK CODE	BRIEF DESCRIPTION
KITT-HEP-50NB1	HEPWORTH, MARINE WIPER MODEL: 50NM 24V, STANDARD LINER

HEPWORTH · 80Nm

Extra heavy duty window wiper, low voltage systems ideal for average to high speed vessels.

- Pantograph and pendulum
- Arms with blades up to 59ins. (1500mm) are available for average speed vessels
- Arms with blades up to 39ins. (1000mm) are available for high speed vessels
- Fixed arc or variable arc model
- 12 and 24 volt DC
- Two speeds
- Self-parking facility
- Insulated earth return and EMC filter are standard
- Operated by various controls including a rotary switch, rocker switch or a multi-speed / function control system

STOCK CODE	BRIEF DESCRIPTION
KITT-HEP-80NB1	HEPWORTH, MARINE WIPER MODEL: 80NM 24V, STANDARD LINER

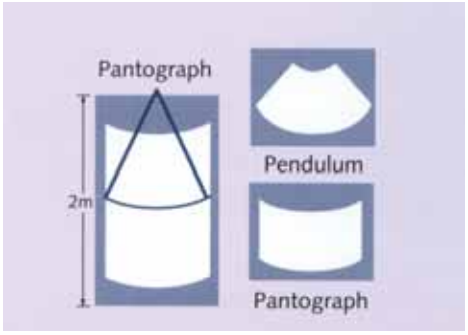

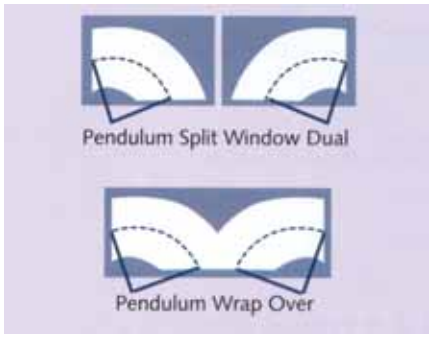

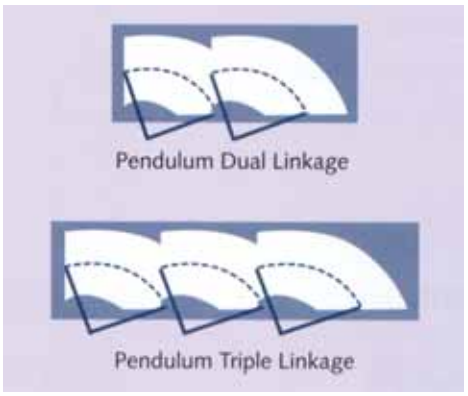

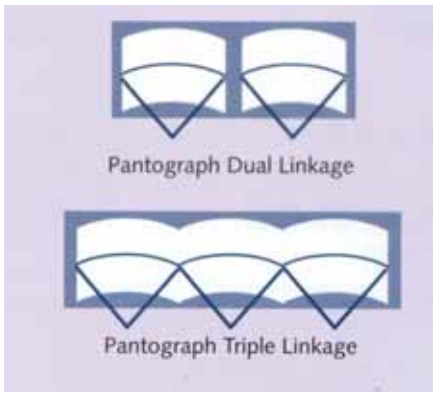

HEPWORTH · PANTOGRAPH ARM

STOCK CODE	BRIEF DESCRIPTION
KITT-HEP-P613K	HEPWORTH, PANTOGRAPH ARM MODEL: P613 28" MAX LG FOR 30NM WIPER
KITT-HEP-P614K	HEPWORTH, PANTOGRAPH ARM MODEL: P614 28" MAX LG FOR 30NM WIPER
KITT-HEP-P615K	HEPWORTH, PANTOGRAPH ARM MODEL: P615 34" MAX LG FOR 50NM WIPER
KITT-HEP-P620K	HEPWORTH, PANTOGRAPH ARM MODEL: P620 39" MAX LG FOR 50NM WIPER
KITT-HEP-P680K	HEPWORTH, PANTOGRAPH ARM MODEL: P680 43" MAX LG FOR 80NM WIPER

NOAH

For more information or order,
please contact our Sales Team at
Tel: **(65) 6266-0788** or E-mail: **sales@noah.com.sg**

HEPWORTH · BLADES

STOCK CODE	BRIEF DESCRIPTION
WIPE-HEP-BC12	HEPWORTH, B140 CURVED BLADE 12" LG W/BOLT & NUT
WIPE-HEP-BC16	HEPWORTH, B140 CURVED BLADE 16" LG W/BOLT & NUT
WIPE-HEP-BC18	HEPWORTH, B140 CURVED BLADE 18" LG W/BOLT & NUT
WIPE-HEP-BC20	HEPWORTH, B140 CURVED BLADE 20" LG W/BOLT & NUT
WIPE-HEP-BC22	HEPWORTH, B140 CURVED BLADE 22" LG W/BOLT & NUT
WIPE-HEP-BC24	HEPWORTH, B140 CURVED BLADE 24" LG W/BOLT & NUT
WIPE-HEP-BC26	HEPWORTH, B140 CURVED BLADE 26" LG W/BOLT & NUT
WIPE-HEP-BC28	HEPWORTH, B140 CURVED BLADE 28" LG W/BOLT & NUT
WIPE-HEP-BC32	HEPWORTH, B140 CURVED BLADE 32" LG W/BOLT & NUT
WIPE-HEP-BC36	HEPWORTH, B140 CURVED BLADE 36" LG W/BOLT & NUT
WIPE-HEP-BC39	HEPWORTH, B140 CURVED BLADE 39" LG W/BOLT & NUT
WIPE-HEP-BC48	HEPWORTH, B140 CURVED BLADE 48" LG W/BOLT & NUT
WIPE-HEP-BC52	HEPWORTH, B140 CURVED BLADE 52" LG W/BOLT & NUT
WIPE-HEP-BF24	HEPWORTH, FLAT BLADE, 24" LG
WIPE-HEP-BF28	HEPWORTH, FLAT BLADE, 28" LG

SWITCHES ELECTRICAL DETAILS

Toggle Switch & Plate.

Dimensions: w20 h38

12v:24v 90041400

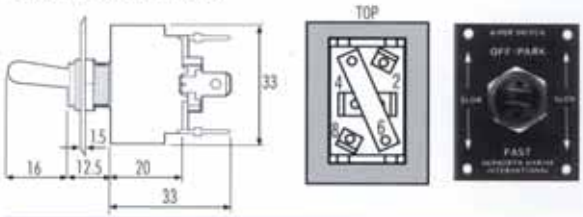

Wiring the Motor Unit to a Toggle Switch	
Motor	Switch
31b (self park reversal feed)	position 8
53 (low speed)	position 4
53a (self park)	position 6 and positive DC ship's supply
53b (high speed)	position 2
31 (earth connection)	the negative ship's supply

Non-intermittent Rotary Switch

12v:24v 10094800

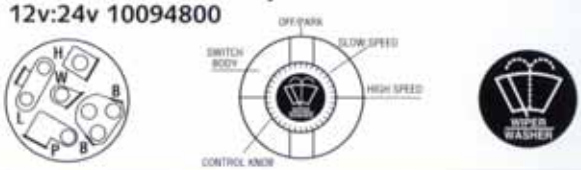

Wiring the Motor Unit to a Rotary Switch	
Motor	Switch
31b (self park reversal feed)	position P
53 (low speed)	position L
53a (self park)	position B and positive DC ship's supply
53b (high speed)	position H
31 (earth connection)	the negative ship's supply
Washer Pump	position W

Multi Speed Control Switch and Plate.

Dimensions: w83 h66

12v - 90041000

24v - 90041100

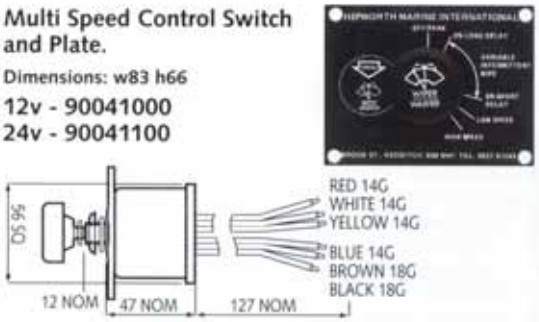

Wiring the Motor Unit to a Multi Speed Control Switch	
Motor	Switch
31b (self park reversal feed)	to the BLUE wire
53 (low speed)	to the YELLOW wire
53a (self park)	both RED wires and positive DC ship's supply
53b (high speed)	to the WHITE wire
31 (earth connection)	to the BLACK wire
Washer Pump	to BROWN wire

>	STOCK CODE	BRIEF DESCRIPTION
	WIPE-HEP-SST2B	P/N:90041400 2 SPEED TOGGLE CONTROL SWITCH 24V W/FACIA PLATE
	WIPE-HEP-SSR1B	ROTARY SWITCH, P/N: 100948 24V, W/PLATE
	WIPE-HEP-SSMOB	P/N: 90087010 MULTI-OPERATION SWITCH, 24V W/FACIA PLATE

NOAH

For more information or order,
please contact our Sales Team at
Tel: **(65) 6266-0788** or E-mail: **sales@noah.com.sg**

TYPE C — Internal motor Straight line wiper

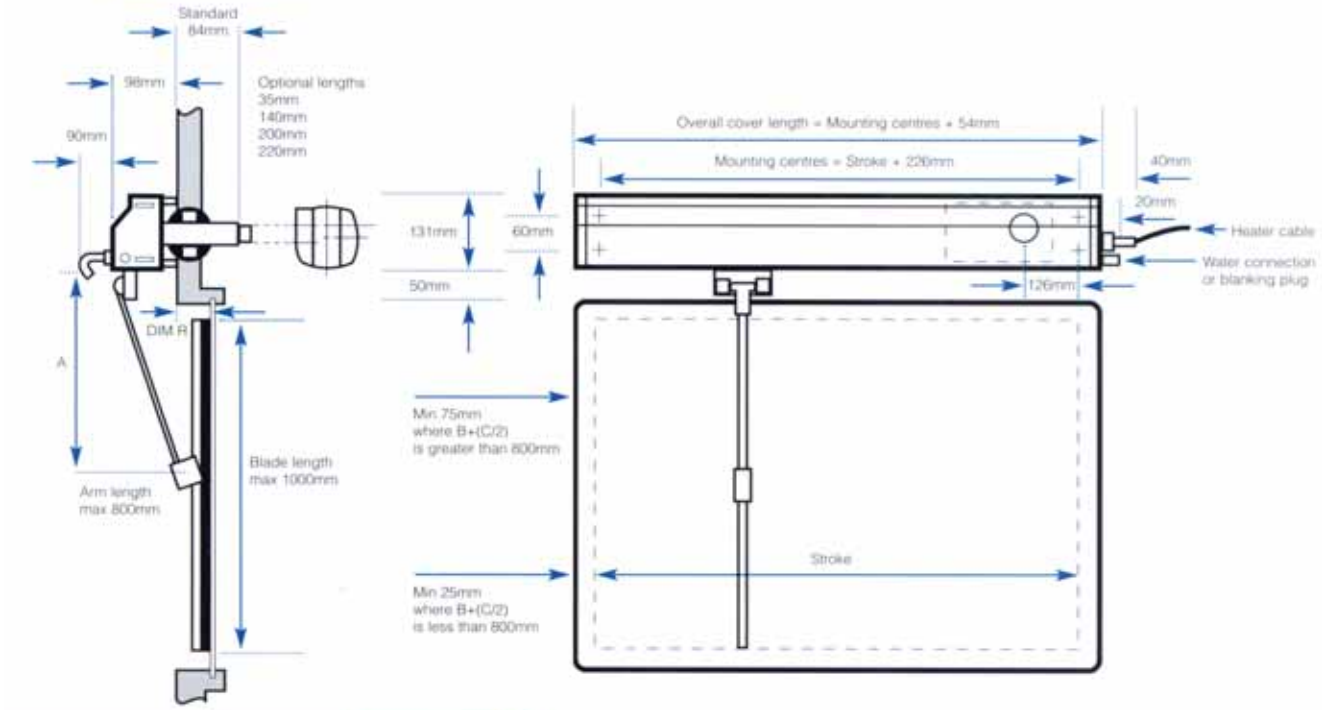

STRAIGHT LINE

SPECIFICATIONS

	SINGLE	TWIN
Stroke	Minimum - 305mm Maximum - 2260mm	Minimum - 585mm Maximum - 4495mm
Arm	Maximum - 800mm	Maximum - 800mm
Blade	Maximum - 1000mm	Maximum - 800mm
Wipe speed: fast/slow	1.4 m per sec / 0.7 m per sec	1.4 m per sec / 0.7 m per sec
AC Motor	Induction : 100,115, 230V	Induction : 100,115, 230V
DC Motor	Permanent magnet : 24V	Permanent magnet : 24V
3-PH Motor	Fast speed / slow speed / intermittent	Fast speed / slow speed / intermittent
1-PH and DC Motor	Fast speed / intermittent	Fast speed / intermittent
De-icing heater	200 watts per metre	200 watts per metre
Park sensor	Fitted	Fitted
Spray nozzles	Inbuilt	Inbuilt
Mounting	Above or below the window	Above or below the window
Approvals	LR, DNV, GL, ABS	LR, DNV, GL, ABS

STOCK CODE	BRIEF DESCRIPTION
WIPE-WYN-TYPC1	WYNN TYPE C STRAIGHT LINE WIPER, SINGLE BLADED
WIPE-WYN-TYPC2	WYNN TYPE C STRAIGHT LINE WIPER, TWIN BLADED

WYNN · TYPE D MK5

External motor straight line wiper, heavy duty – ideal for large ocean-going vessels.

- Externally mounted, heavy duty, straight line wiper
- Arms with blades up to 39ins. (1000mm) are available
- A large wiped window coverage can be achieved
- Reliable operation in extreme temperatures
- Motor housing fully sealed to IP67 standards
- 2 speeds operation with self parking facility
- Available in 24, 115 and 230 volts, single phase or three phase AC
- Operated by a multi-speed / function control facility

Specifications

Single

Stroke	min - 305mm, max - 2260mm
Blade	max - 1000mm
Arm	max - 800mm

Twin

Stroke	min - 585mm, max - 4495mm
Blade	max - 800mm
Arm	max - 800mm

Wipe speed: fast/slow	1.4m per sec / 0.7m per sec
AC Motor	induction type: 100, 115, 230v
DC Motor	permanent magnet: 24v
3-PH Motor	fast speed / slow speed / intermitten
1-PH and DC	normal speed / intermitten
De-icing Heater	200 watts per metre
Park Sensor	inductive park sensor
Spray Nozzels	1 up to 990mm stroke, 2 if > 1015mm stroke 6mm overall diameter tubing
Mounting	above, below or vertical on the window
Type Approvals	DNV, ABS

NOAH

For more information or order,
please contact our Sales Team at
Tel: **(65) 6266-0788** or E-mail: **sales@noah.com.sg**

SERIES 1000 • Wiper Controllers

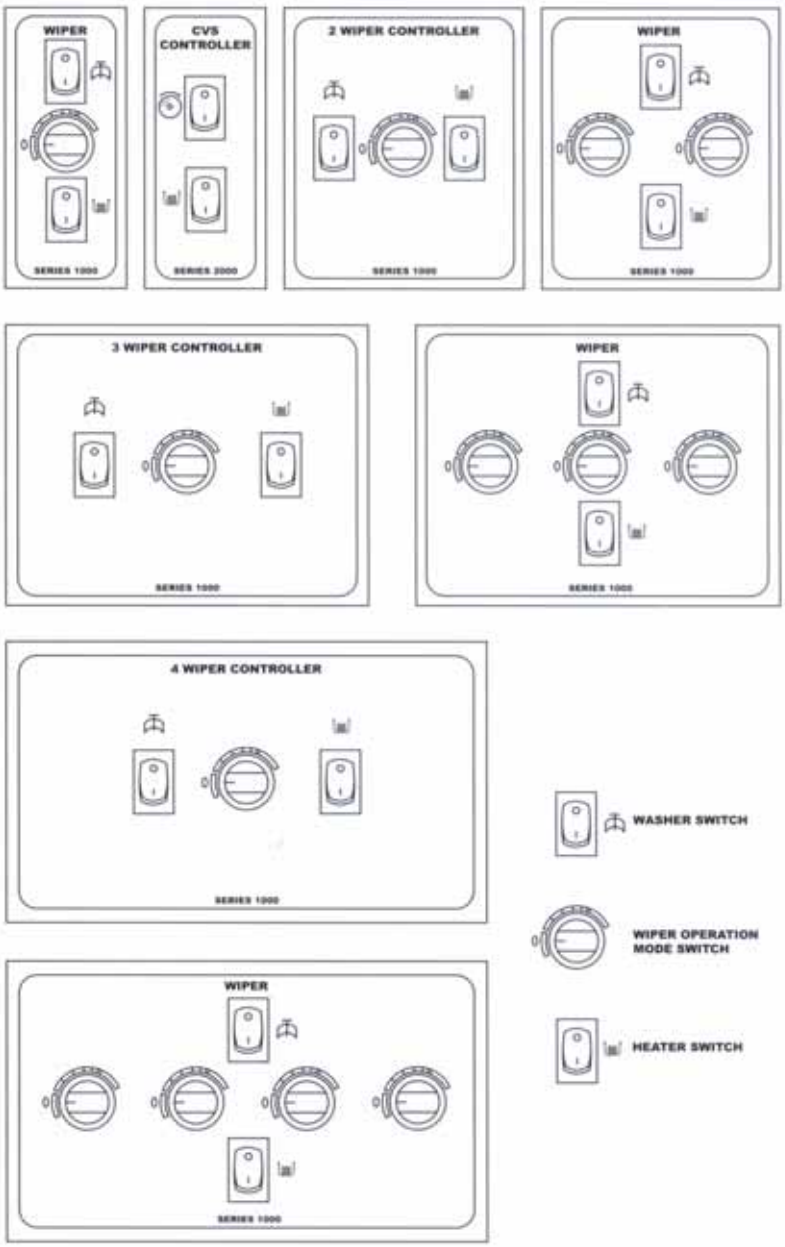

CONTROLLERS

SPECIFICATIONS

	Cut- out size (mm)	Overall size (mm)	Weight (kgs.)
1 way	45mmW * 91mmH * 152mmD	48mmW * 96mmH * 152mmD	0.4 kgs
2 way	91mmW * 91mmH * 152mmD	96mmW * 96mmH * 152mmD	0.6 kgs
3 way	139mmW * 91mmH * 152mmD	144mmW * 96mmH * 152mmD	0.9 kgs
4 way	186mmW * 91mmH * 152mmD	192mmW * 96mmH * 152mmD	1.2 kgs

WYNN · 6000 SERIES CONTROLLER

Fufills all requirements for small up to complex systems.

Flexibility

Large bridges can be divided into zones, each of which may be configured into groups. Different electrical supplies and voltages can be controlled in the same system, and additional wipers and equipment can be added at a later date with no complicated design change.

The Series 6000 Control System consists of modules that may be distributed around the bridge in close proximity to each wiper. A single power cable to the module can provide a wiper, wash and air purge, or wiper, wash and heat functionality. For large systems requiring multiple functions, a separate wash/purge/screen heat module is available.

The system is controlled from a conveniently positioned control keypad, available as Single Speed or Two speed, Master Group Control, 1 to 5 Groups, All Groups Single Wipe, 3 intermittent Wipes, wash, Case Heat and Window Heat.

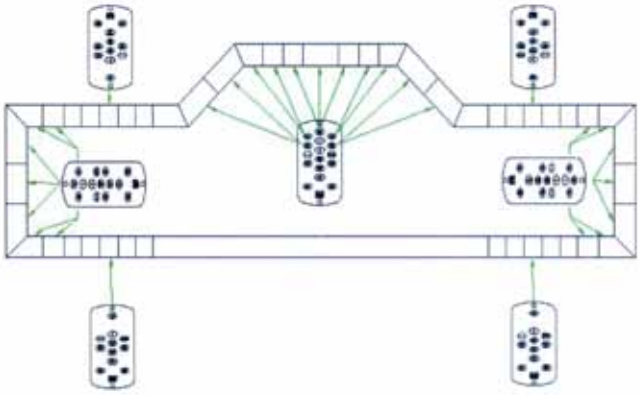

NOAH

For more information or order,
please contact our Sales Team at
Tel: **(65) 6266-0788** or E-mail: **sales@noah.com.sg**

At work or at play

don’t compromise on safety

Whatever your reason for being on the water, confidence in your marine safety gear is everything. You need to know it will perform as expected, even in the most extreme situations.

Cosalt and its subsidiary Crewsaver have been at the forefront of both the commercial and leisure marine industries for many years, developing innovative products that are manufactured in the UK to the highest possible standards.

When safety is critical don’t compromise. Choose a name you can trust and enjoy complete peace of mind.

For more information on the Cosalt product range:
Tel: +44 (0)1472 504504 or email sales@cosalt.com
www.cosalt.com

For more information on the Crewsaver product range:
Tel: +44 (0)23 9252 8621 or email sales@crewsaver.co.uk
www.crewsaver.co.uk

COSALT™

Crewsaver

FIRE FIGHTING

Cosalt
Fish Dock Road, Grimsby,
NE Lincolnshire, DN31 3NW
Unitied Kingdom

Crewsaver
Mumby Road, Gosport,
Hampshire. PO12 1AQ.
United Kingdom

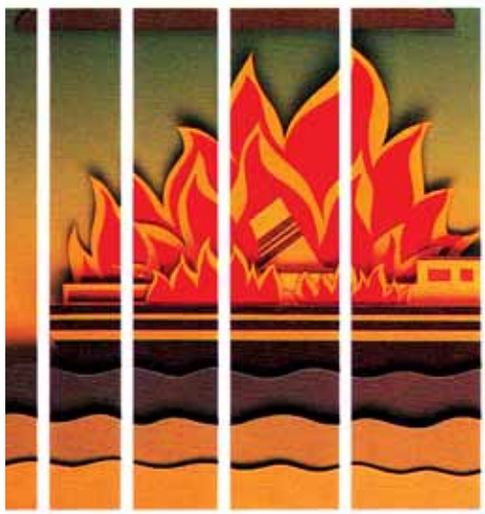

With
NOAH,
It's
Smooth
Sailing
All The
Way.

NOAH

THE MARINE LIFE-SAVING AND FIRE-FIGHTING EQUIPMENT SPECIALIST

FIRE FIGHTING

FIRE FIGHTING

NOAH represents some of the finest names in Fire Fighting Equipment. We provide a full-line of Fire Fighting Equipment produced by the world's top manufacturers and distributed to clients arond the world.

We provide full protection for the FIre Fighter from Head to Toe Helmets, Hoods, Aluminized clothing Nomex clothing, Boots.

Respiratory Protection to protect and allow them to perform their job - Self- Contained Breathing Apparatus, Gas Mask, Escape Hoods.

Special tools to assist them in their work-safety lamps, explosion-proof torches, fire-proof rescue line, rescue equipment.

Complete range of Fire Exinguishers - Dry Chemical, Foam, Carbon Dioxide, Water, in a variety of size.

CONTENTS

PRODUCT CODE	PRODUCTS	PAGE
CABT	CABINETS & CONTAINERS	158
CLFF	CLOTHING FIRE FIGHTING	160
EXTG	FIRE EXTINGUISHERS & ACCESSORIES	172
FDCS	FIRE DETECTION CONTROL SYSTEMS	180
FFEQ	FIRE FIGHTING EQUIPMENT	182
HCNZ	HOSE, COUPLING, NOZZLES	183
LPHL	LIGHT, PORTABLE HANDHELD REFER TO MARINE SAFETY	50
PPHE	SAFETY HELMETS	184
RESA	RESPIRATORY - AIR A) BREATHING APPARATUS B) AIRLINE SYSTEM C) EMERGENCY ESCAPE BREATHING DEVICE D) RESUSCITATOR	185

CABINETS & CONTAINERS

CABINETS (FIRE)

CABINETS (INDUSTRIAL)

NOAH

For more information or order,
please contact our Sales Team at
Tel: **(65) 6266-0788** or E-mail: **sales@noah.com.sg**

CONTAINERS

EEBD

FIRE HOSE BOX
FIRE
HOSE

INTERNATIONAL
SHORE CONNECTION

F

FIRE
EXTINGUISHER

CLOTHING FIRE

Lakeland OSX1000
Fire Brigade Suit

OSX™ 1000 Features

Fyrepel's innovative Drag Rescue Device (DRD) stays out of the way until needed.

OSX™ 1000 35" Jacket (Traditional Style)	
1.	New Drag Rescue Device on back of coat near collar
2.	Outer shell reinforced shoulders and yoke
3.	Padded Shoulders in Liner
4.	Mic Clip
5.	Moisture barrier lined inner facing with snap/hook and dee under storm flap with Velcro®
6.	Snap and Velcro® removable liner system
7.	Self material reinforced cuffs for longer life
8.	Kevlar® thumb hole wristlets
9.	35" coat length
10.	NFPA compliant high-visibility 3M brand Scotchlite® reflective trim
11.	3-piece tailored outer shell
12.	All coat seams are double stitched using Nomex® thread
13.	Two 10" x 10" pockets with Velcro® closures and drain holes
14.	Underarm gussets
15.	8" x 4" x 2" radio pocket with drain hole
16.	Flashlight hook and strap on left chest
17.	Moisture barrier lined tapered 4" collar with Velcro® closure

OSX™ 1000 Pants (Traditional Style)	
1.	Double reinforced waistband with 8 point suspender buttons
2.	Snap/Velcro® removable liner system
3.	Adjustable waist self material take-up straps
4.	4-piece tailored body
5.	Outer shell reinforced padded knees
6.	Self material reinforced pant cuffs
7.	NFPA compliant high-visibility 3M brand Scotchlite® reflective trim
8.	All pant seams are double stitched using Nomex® thread
9.	Diamond gusset crotch for ease of entry
10.	Large double layered tapered fly with hook and dee, snap/Velcro® closure system
11.	Two 7" x 8" seat pockets with Velcro® closures and drain holes

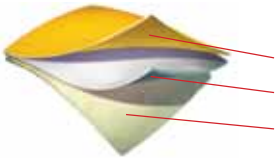

OSX™ 1000 Materials

Yellow Nomex® Outer shell
Stedair 3000® Moisture Barrier
Aralite® Thermal Liner

>	STOCK CODE	BRIEF DESCRIPTION
	ZMIS-LKL-ZZZC	LAKELAND, OSX1000 FIRE BRIGADE SUIT C/W JACKET & TROUSERS, FYREPEL OSX, YELLOW NOMEX WITH RED 3M REFLECTIVE TRIM & CARRYING BAG NFPA 1971-2007 EDITION CERTIFIED

Third party certified to the current edition of NFPA 1971. Meets the requirements for 29CFR 1910.156

TEMPEX® AUSTRIA

FIRE BRIGADE PROTECTIVE SUIT

TEMPEX, FIRE BRIGADE SUIT C/W:

- FIRE BRIGADE JACKET, BLUE
- FIRE BRIGADE TROUSERS, BLUE
- FIRE BRIGADE 5-FINGERS GLOVES, BLUE
- FIREFIGHTING HELMET, BULLARD, YELLOW
- CARRYING BAG, BLUE

STOCK CODE	BRIEF DESCRIPTION
PICK-TPA-FBP04	TEMPEX, FIRE BRIGADE PROTECTIVE SUIT COMPLETE, SIZE: M
PICK-TPA-FBP06	TEMPEX, FIRE BRIGADE PROTECTIVE SUIT COMPLETE, SIZE: L
PICK-TPA-FBP08	TEMPEX, FIRE BRIGADE PROTECTIVE SUIT COMPLETE, SIZE: XL

Note: Other sizes, please contact our sales.

NOAH

For more information or order,
please contact our Sales Team at
Tel: **(65) 6266-0788** or E-mail: **sales@noah.com.sg**

TEMPEX, “KAERNTEN“ FIRE BRIGADE JACKET

OUTER FABRIC - Nomex® Delta TA (approx. 195 g/m2)
CLIMATE MEMBRANE - empex® - Fire - Insert (approx. 125 g/m2)
LINING- Aramide regeneration lining, 2-layer(approx. 270 g/m2)

- One breast pocket with flap, on the right hand side
- Two outer side pockets with flaps
- One inside pocket with Velcro fastening
- 3M Scotchlite™ yellow/silver/yellow reflective strips

STOCK CODE	BRIEF DESCRIPTION
CLFF-TPA-FJKT2	TEMPEX,"KAERNTEN" FIRE BRIGADE JACKET, EN 469:2005, SIZE: M
CLFF-TPA-FJKT3	TEMPEX,"KAERNTEN" FIRE BRIGADE JACKET, EN 469:2005, SIZE: L
CLFF-TPA-FJKT4	TEMPEX,"KAERNTEN" FIRE BRIGADE JACKET, EN 469:2005, SIZE: XL

Note: Other sizes, please contact our sales.

TEMPEX, P/N 41015, “BOMBERO“ FIRE BRIGADE 5-FINGERS GLOVES

Palm, thumbs and fingers made of Kevlar® silicone/carbon composite
hand and finger back made of Nomex® Delta TA or PBI

High-quality, tear proof climate membrane inner glove made of Kevlar® fabric

STOCK CODE	BRIEF DESCRIPTION
CLFF-TPA-FGLV1	TEMPEX, P/N 41015, "BOMBERO" FIRE BRIGADE GLOVES, SIZE: 9
CLFF-TPA-FGLV2	TEMPEX, P/N 41015, "BOMBERO" FIRE BRIGADE GLOVES, SIZE: 10

Note: Other sizes, please contact our sales.

TEMPEX, “KAERNTEN“ FIRE BRIGADE TROUSERS

• Two slit pockets or trouser pockets, two hook fastenings, one thigh pocket (left), high kidney protection, adjustable elasticated braces with buckle, tear and abrasion resistant fabric on knees

STOCK CODE	BRIEF DESCRIPTION
CLFF-TPA-FTSR2	TEMPEX,"KAERNTEN" FIRE BRIGADE TROUSERS, EN 469:2005, SIZE: M
CLFF-TPA-FTSR3	TEMPEX,"KAERNTEN" FIRE BRIGADE TROUSERS, EN 469:2005, SIZE: L
CLFF-TPA-FTSR4	TEMPEX,"KAERNTEN" FIRE BRIGADE TROUSERS, EN 469:2005, SIZE: XL

BULLARD, LTX FIREFIGHTER HELMET

• Helmet shell of phenol textile with adjustable plastic interior fittings.

STOCK CODE	BRIEF DESCRIPTION
PPHE-LCL-XHMT3	BULLARD, LTX FIREFIGHTER HELMET C/W NECK PROTECT & 4" FACESHIELD, NFPAT

CARRYING BAG FOR TEMPEX FIRE BRIGADE SUIT

STOCK CODE	BRIEF DESCRIPTION
CLFF-LCL-XBAG1	CARRYING BAG FOR TEMPEX FIRE BRIGADE

For more information or order,
please contact our Sales Team at
Tel: **(65) 6266-0788** or E-mail: **sales@noah.com.sg**

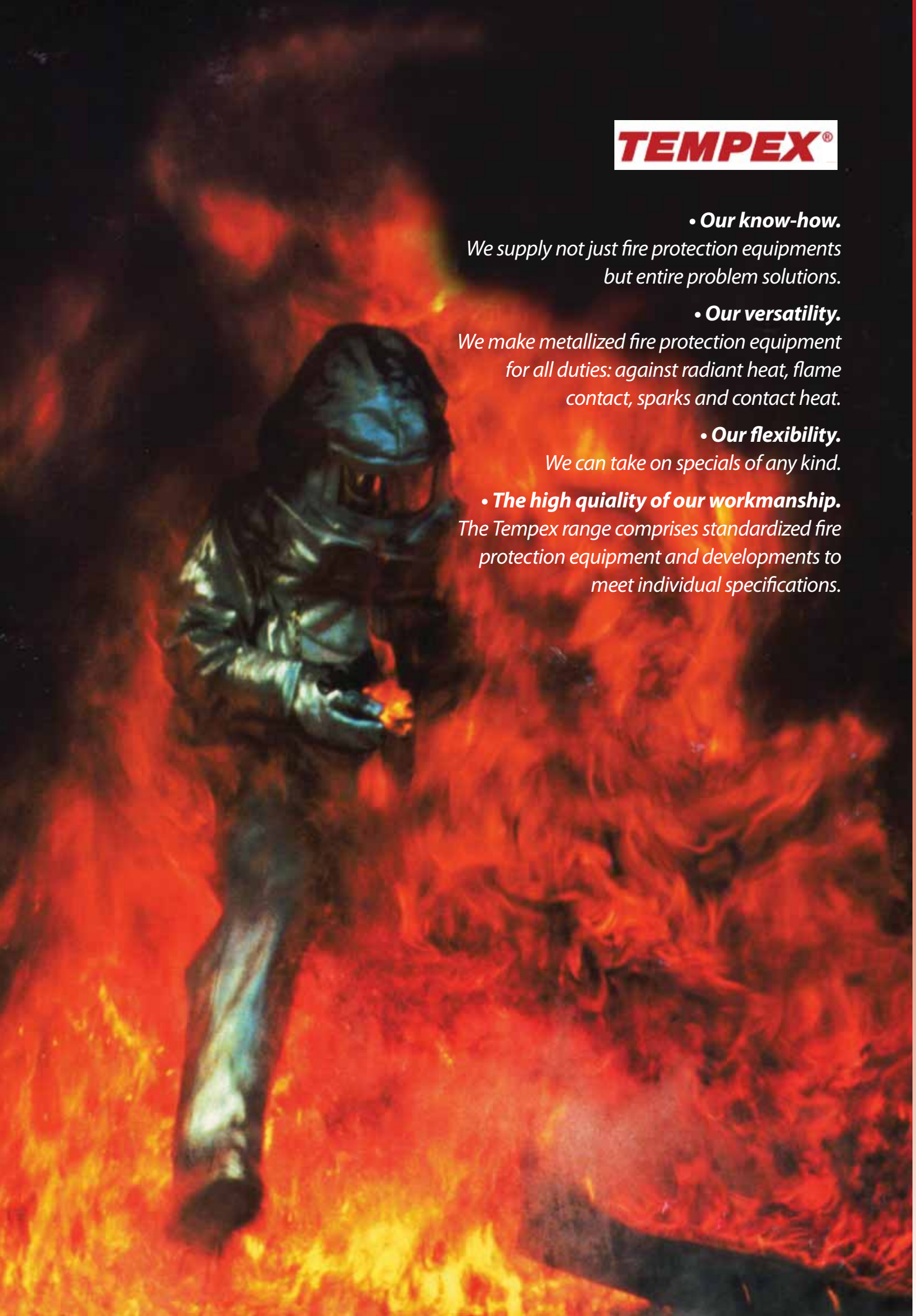
TEMPEX®
• Our know-how.
We supply not just fire protection equipments but entire problem solutions.
• Our versatility.
We make metallized fire protection equipment for all duties: against radiant heat, flame contact, sparks and contact heat.
• Our flexibility.
We can take on specials of any kind.
• The high quiality of our workmanship.
The Tempex range comprises standardized fire protection equipment and developments to meet individual specifications.

FIRE FIGHTING SUIT

TEMPEX®

TEMPEX FIREMAN SUIT

Origin: Germany, c/w:
- Aluminised coat, trousers & gloves
- Helmet c/w: visor & aluminium neck piece.
- Rubber boots and carrying bag.

STOCK CODE	BRIEF DESCRIPTION
PICK-TPX-FSUIT-00	TEMPEX FIREMAN SUIT, SIZE: 000, STANDARD
PICK-TPX-FSUIT-02	TEMPEX FIREMAN SUIT, SIZE: 002 (EURO)

TEMPEX BOP SAFETY HELMET

- P/N: 1028900 HINGED MOUNT
- P/N: 6471001 ALL ROUND VISOR, TRANSPARENT
- P/N: 0322511 ALUMINISED NECK CURTAIN

STOCK CODE	BRIEF DESCRIPTION
PICK-TPX-HMT01	TEMPEX P/N: 1028601 BOP SAFETY HELMET, SIZE: 003

NOAH

For more information or order,
please contact our Sales Team at
Tel: **(65) 6266-0788** or E-mail: **sales@noah.com.sg**

FIREMAN SUIT FOR B.A. ACCOMMODATION

Origin: Germany, c/w:
- Aluminised coat 950mm long, P/N:0721311, trousers size: 000, p/n: 0720311,
- Gloves P/N: 0620550, helmet c/w visor & bracket, neck curtain p/n: 0322511
- Boots with steel toe cap and carrying bag

STOCK CODE	BRIEF DESCRIPTION
PICK-TPX-FSBAA-00	TEMPEX FIREMAN SUIT WITH B.A. ACCOMMODATION COMPLETE, SIZE: 000

TEMPEX FIREMAN SUIT, SET TX 14

EC-MED approved to SOLAS, origin: Germany, c/w:
- Aluminised coat size: 000, trousers size: 000 & gloves,
- RF1/Y fire protection head guard KH3 , visor polycarbonate gold plated,
- Spring gaiter 180mm, K-2/Z and carrying bag

STOCK CODE	BRIEF DESCRIPTION
PICK-TPX-FTX14-00	TEMPEX TX14 , FIREMAN SUIT COMPLETE, SIZE: 000, STANDARD

FIRE FIGHTING CLOTHING - LOOSE ITEMS

TEMPEX ALUMINISED JACKET DIN EN 531

Jacket JKF4:800 mm long. Ball sleeves. Hock and loop fastener on right. Elastic bands in cuffs. Not for respirator.

STOCK CODE	BRIEF DESCRIPTION
CLFF-TPX-AJKT1-00	TEMPEX P/N 0721011 ALUMINISED JACKET ONLY, SIZE: 000
CLFF-TPX-AJKT1-02	TEMPEX ALUMINISED JACKET ONLY, SIZE: 002

TEMPEX ALUMINISED JACKET FOR B.A ACCOMMODATION

STOCK CODE	BRIEF DESCRIPTION
CLFF-TPX-AJKT2	TEMPEX P/N 0721311 ALUMINISED JACKET ONLY, 950MM LONG W/ B.A ACCOMMODATION

Jacket only --->

NOAH

For more information or order,
please contact our Sales Team at
Tel: **(65) 6266-0788** or E-mail: **sales@noah.com.sg**

TEMPEX ALUMINISED TROUSERS DIN EN 531

Trousers HSF 4: CUT Wide, adjustable braces.

STOCK CODE	BRIEF DESCRIPTION
CLFF-TPX-ATSR1-00	TEMPEX P/N 0710311 ALUMINISED TROUSERS ONLY, SIZE: 000
CLFF-TPX-ATSR1-02	TEMPEX ALUMINISED TROUSERS ONLY, SIZE: 002

TEMPEX ALUMINISED GLOVES
DIN EN 407

Five fingers, 340mm long. Back of hand and gauntlet of KF 3/Z Para-Aramide 500 g/m^2. Palm of heat-resistant chrome split leather. Lined inside.

STOCK CODE	BRIEF DESCRIPTION
CLFF-TPX-AGLV1-34	TEMPEX P/N 0620550 ALUMINISED GLOVES ONLY

TEMPEX ALUMINISED NECK CURTAIN

STOCK CODE	BRIEF DESCRIPTION
CLFF-TPX-ANECK	TEMPEX P/N 0322511 ALUMINISED NECK CURTAIN

CARRYING BAG

STOCK CODE	BRIEF DESCRIPTION
CLFF-TPX-XBAG	CARRYING BAG

TEMPEX ALUMINISED FIRE PROTECTION HEAD GUARD

Head guard KH3, designed for fire helmet. Chin strap, aluminium for curved visor window 100 x 220 mm.
Window: Polycarbonate, gold plated.

STOCK CODE	BRIEF DESCRIPTION
CLFF-TPX-AHGD1	TEMPEX P/N 0741411 RF1/Y FIRE PROTECTION HEAD GUARD KH3
CLFF-TPX-AHGD1-01	TEMPEX P/N 6461022 VISOR POLYCARBONATE GOLD PLATED VISOR

TEMPEX ALUMINISED FOOT PROTECTION DIN EN 531

180mm high, of K 2/Z Para-Aramide/glass 710 g/m2. With circular spring in leg and instep with spring.

STOCK CODE	BRIEF DESCRIPTION
CLFF-TPX-AGTR1	TEMPEX P/N 066 0818 SPRING GAITER 180MM, K-4/Z

TEMPEX BALACLABVES

STOCK CODE	BRIEF DESCRIPTION
CLFF-TPX-BLCVS-01	TEMPEX P/N 3320501 BALACLAVES MADE OF NOMEX III, FACE OPENING OVAL LENGTH: 36CM

NOAH

For more information or order,
please contact our Sales Team at
Tel: **(65) 6266-0788** or E-mail: **sales@noah.com.sg**

TEMPEX SAFETY HELMET DIN EN 397

- Protection against high temperatures and splashing metal to EN 397 standard.
- For attaching the face shield to the safety helmet. The face shield can be adjusted to three postions and can be swung over the head. Anti-tilt design. Fits all commercially available helmets.

STOCK CODE	BRIEF DESCRIPTION
PPHE-TPX-HMT01	TEMPEX P/N 1028601 SAFETY HELMET BOP, SIZE: 003
PPHE-TPX-HMT02-01	TEMPEX P/N 1028900 HINGED MOUNT FOR ABOVE HELMET
PPHE-TPX-HMT02-02	TEMPEX P/N 6471001 ALL ROUND VISOR, TRANSPARENT FOR ABOVE HELMET

TEMPEX SAFETY BOOTS DIN EN 345

Contact heat-resistand up to 300°C. Shaft height approx. 26cm. Front and heel section made of alumnised full cowhide, shaft made of graind cowhide. With leather insole and replaceable, washable insert. Red nitrile sole with heat-insulating bed, Sole stitching with NOMEX specialty thread. Soft leather insert in calf area with adjustable double quick-fastener.

STOCK CODE	BRIEF DESCRIPTION
PPFT-TPX-BOT02-43	TEMPEX P/N 0685006 SAFETY BOOTS, SIZE: 43 (09)
PPFT-TPX-BOT02-44	TEMPEX P/N 0685006 SAFETY BOOTS, SIZE: 44 (10)

EXTINGUISHERS

JOCKEL ABC POWDER EXTINGUISHER

JOCKEL · PS1JM MINI

PS1JM MINI 1kg ABC powder, stored pressure, frost-resistant, steel cylinder, brass valve M30 with pressure gauge, test and refill connection, plastic hood, pleastic vehicle bracket.

Operating temperature: -30degC to +60degC
Fire Rating: 8 A 34 B C

STOCK CODE	BRIEF DESCRIPTION
ZMIS-JOC-ZPS01	JOCKEL, PS1JM MINI, 1450135, ABC POWDER EXTINGUISHER, 1KG, STORED PRESSURE

JOCKEL · PS2JM

PS2JM 2kg ABC powder, stored pressure, frost-resistant, steel cylinder, brass valve M30 with pressure gauge, test and refill connection, plastic hood, vehicle bracket.

Operating temperature: -30degC to +60degC
Fire Rating: 13 A 89 B C

STOCK CODE	BRIEF DESCRIPTION
EXTG-JOC-P02SA	JOCKEL, PS2JM, 2450135, ABC POWDER EXTINGUISHER, 2KG, STORED PRESSURE

For more information or order,
please contact our Sales Team at
Tel: **(65) 6266-0788** or E-mail: **sales@noah.com.sg**

JOCKEL · P6J / P9J / P12J

P6J 6kg ABC powder, CO2 cartridge operated, frost-resistant, steel cylinder, push-button plastic valve M74 with nickle-plated inserted parts, high pressure hose with pistol, controllable discharge, wall mounting bracket

Operating temperature: -30degC to +60degC
Fire Rating: 34 A 233 B C

P9J 9kg ABC powder, CO2 cartridge operated, frost-resistant, steel cylinder, push-button plastic valve M74 with nickle-plated insergted parts, high-pressure hose with pistol, controllable discharge, wall mounting bracket

Operating temperature: -30degC to +60degC
Fire rating: 55 A 233 B C

P12J 12kg ABC powder, CO2 cartridge operated, frost-resistant, steel cylinder, push-button plastic valve M74 with nickle-plated inserted parts, high-pressure hose with pistol, controllable discharge, wall mounting bracket

Operating temperature: -30degC to +60degC
Fire Rating: 55 A 233 B C

STOCK CODE	BRIEF DESCRIPTION
EXTG-JOC-P06CA	JOCKEL, P6J, 6150035, ABC POWDER EXTINGUISHER, 6KG, CARTRIDGE OPERATED
ZMIS-JOC-ZPC09	JOCKEL, P9J, 9150035, ABC POWSER EXTINGUISHER, 9KG, CARTRIDGE OPERATED
ZMIS-JOC-ZPC12	JOCKEL, P12J, 7150035, ABC POWDER EXTINGUISHER, 12KG, CARTRIDGE OPERATED

JOCKEL · P6LJM / P9LJM / P12LJM

P6LJM 6kg ABC powder, stored pressure, frost-resistant, steel cylinder, steel lever squeeze grip valve M30 of brass with pressure gauge, test and refill connection, high-pressure hose with nozzle, wall mounting bracket

Operating temperature: -30degC to +60degC
Fire Rating : 34 A 233 B C

P9LJM 9kg ABC powder, stored pressure, frost-resisted, steel cylinder, steel lever squeeze grip valve M30 of brass with pressure gauge, test and refill connection, high-pressure HOSE WITH NOZZLE, WALL MOUNTING BRACKET

Operating temperature: -30degC to +60degC
Fire Rating : 43 A 233 B C

P12LJM 12kg ABC powder, stored pressure, frost-resistant, steel cylinder, steel lever squeeze grip valve M30 of brass with pressure gauge, test and refill connection, high-pressure hose with nozzle, wall mounting bracket

Operating temperature: -30degC to +60degC
Fire Rating: 55 A 233 B C

STOCK CODE	BRIEF DESCRIPTION
EXTG-JOC-P06SA	JOCKEL, P6LJM, 6050135, ABC POWDER EXTINGUISHER, 6KG, STORED PRESSURE
EXTG-JOC-P09SA	JOCKEL, P9LJM, 9050135, ABC POWDER EXTINGUISHER, 9KG, STORED PRESSURED
EXTG-JOC-P12SA	JOCKEL, P12LJM, 7050135, ABC POWDER EXTINGUISHER, 12KG, STORED PRESSURE

NOAH
For more information or order,
please contact our Sales Team at
Tel: **(65) 6266-0788** or E-mail: **sales@noah.com.sg**

JOCKEL · P25AJ / P50AJ

P25AJ Wheeled Fire Extinguisher 25kg ABC-powder, stored pressure, frost resistant -30deg C, Steel Cylinder, Half-automatic valve M74 of nickle-plated brass, test and refill connection, 5m high-pressure hose with pistol, controllable discharge, chassis with support

Operating Temperature : -30degC to +60degC

P50AJ Wheeled Fire Extinguisher 50kg ABC-powder, stored pressure, frost resistant -30deg C, Steel Cylinder, Half-automatic valve M74 of nickle-plated brass, test and refill connection, 5m high-pressure hose with pistol, controllable discharge, chassis with support

Operating Temperature : -30degC to +60degC

STOCK CODE	BRIEF DESCRIPTION
ZMIS-JOC-ZPS25	JOCKEL, P25AJ, 3052535, ABC POWDER WHEELED FIRE EXTINGUISHER, 25KG, STORED PRESSURE
ZMIS-JOC-ZPS50	JOCKEL, P50AJ, 3053535, ABC POWDER WHEELED FIRE EXTINGUISHER, 50KG, STORED PRESSURE

JOCKEL · P50GJ

P50GJ Wheeled Fire Extinguisher 50kg ABC Powder, Cartridge-Operated, Frost Resistant, Steel Cylinder, Cover with Safety Valve, Outside 3 Litre Compressed-Air Bottle, 5m High-Pressure Hose with Pistol, Controllable Discharge, Chassis with Guided Wheel, Vulcanite Running Wheels and Carrying Handle

Operating Temperature: -20deg C to + 60degC

STOCK CODE	BRIEF DESCRIPTION
ZMIS-JOC-ZPC50	JOCKEL, P50GJ, 3176535, ABC POWDER WHEELED FIRE EXTINGUISHER, 50KG, CARTRIDGE OPERATED

JOCKEL CO2 EXTINGUISHER

JOCKEL · K2J

K2J 2kg CO2, frost-resistant, steel cylinder, steel lever squeeze grip valve of brass, horn, vehicle bracket, steel base

Operating temperature: -30degC to +60degC
Fire Rating : 34 B

STOCK CODE	BRIEF DESCRIPTION
EXTG-JOC-C02SA	JOCKEL, K2J, 2650035, CO2 EXTINGUISHER, 2KG

JOCKEL · K5J

K5J 5kg CO2, frost-resistant, steel cylinder, steel lever squeeze grip valve of brass, hose with horn, expansion ring, wall mounting bracket, steel base

Operating temperature: -30degC to +60degC
Fire Rating : 89 B

STOCK CODE	BRIEF DESCRIPTION
EXTG-JOC-C05SA	JOCKEL, K5J, 5650035, CO2 EXTINGUISHER, 5KG

NOAH

For more information or order,
please contact our Sales Team at
Tel: **(65) 6266-0788** or E-mail: **sales@noah.com.sg**

JOCKEL · KS20J / KS30J

KS20J Wheeled Extinguisher 20kg CO2, frost-resistant, steel cylinder, rotary valve of brass, safety bursting disc device, 6m high-pressure hose with interruptible ball valve and lance, chassis with vulcanite running wheels.

Operating temperature: -30degC to +60degC
KS30J Wheeled Extinguisher, 30kg CO2, 6 m painted RED.

STOCK CODE	BRIEF DESCRIPTION
ZMIS-JOC-ZCC20	JOCKEL, KS20J, 3506635, CO2 WHEELED EXTINGUISHER, 20KG
ZMIS-JOC-ZCC30	JOCKEL, KS30J, 3606635, CO2 WHEELED EXTINGUISHER, 30KG

JOCKEL · KS60J

KS60J Wheeled Extinguisher, 60kg CO2, 6 m hose with controllable release, steel cylinder painted RED.

STOCK CODE	BRIEF DESCRIPTION
ZMIS-JOC-ZCC60	JOCKEL, KS60J, 3706653, CO2 WHEELED EXTINGUISHER, 60KG

JOCKEL WATER EXTINGUISHER

JOCKEL · W9LJM

W9LJM 9ltrs Water with additive, stored pressure, not frost-resistant, steel cylinder with internal coating, steel lever squeeze grip valve M30 of brass with pressure gauge, test and refill connection, high-pressure hose with nozzle, wall mounting bracket

Operating Temperature: +5degC to 60degC
Fire Rating: 27 A

STOCK CODE	BRIEF DESCRIPTION
EXTG-JOC-W09SA	JOCKEL, W9LJM, 9000135, WATER EXTINGUISHER, 9KG, STORED PRESSURE

JOCKEL · W9DJLM

W9DJLM Standard Fire Extinguisher 9 Ltr Water with Additive, Stored Pressure, Not Frost-Resistant, Steel Cylinder with Internal Coating, Steel Lever Squeeze Grip Valve M30 of Brass with Pressure Gauge, Test and Refill Connection, High Pressure Hose with Nozzle, Wall Mounting Bracket

Operating Temperature : +5degC to 60degC
Fire Rating : 21 A

STOCK CODE	BRIEF DESCRIPTION
EXTG-JOC-W09SB	JOCKEL, W9DJLM, 9008135, WATER EXTINGUISHER, 9KG, STORED PRESSURE

JOCKEL · WN9J

WN9J 9ltrs Water, steel cylinder painted RED, interior CO2 cartridge, nickel-plated striking mecanism valve from brass, high pressure hose with controllable pistol, not freeze-protected, wall bracket

Operating Temperature : +5degC to +60deg C
Fire Rating : 27 A

STOCK CODE	BRIEF DESCRIPTION
ZMIS-JOC-ZWC09	JOCKEL, WN9J, 9523035, WATER EXTINGUISHER, 9KG, CARTRIDGE OPERATED

NOAH
For more information or order,
please contact our Sales Team at
Tel: **(65) 6266-0788** or E-mail: **sales@noah.com.sg**

JOCKEL FOAM EXTINGUISHER

JOCKEL · S9DJLM

S9DJLM Standard Fire Extinguisher 9 Litre Foam, Stored Pressure, Not Frost Resistant, Steel Cylinder with Internal Coating, Steel Lever Squeeze Grip Valve M30 of Brass, with Pressure Gauge, Test and Refill Connection, High Pressure Hose with Nozzle, Wall Mounting Bracket

Operating Temperature = +5deg C to +60deg C
Fire Rating: 21 A 183 B

STOCK CODE	BRIEF DESCRIPTION
EXTG-JOC-F09SB	JOCKEL, S9DJLM, 9608135, FOAM EXTINGUISHER, 9KG, STORED PRESSURE

JOCKEL · SN9J

SN9J 9 ltrs Foam, CO2 cartridge operated, steel cylinder with internal coating, pushbutton plastic valve M74 with nickle-plated inserted parts, high-pressure hose with pistol, controllable discharge, wall mounting bracket

Operating Temperature: +5degC to +60deg C
Fire Rating : 34 A 233 B

STOCK CODE	BRIEF DESCRIPTION
EXTG-JOC-F09CA	JOCKEL, SN9J, 9900035, FOAM EXTINGUISHER, 9KG, CARTRIDGE OPERATED

JOCKEL · S50J

S50J 50ltrs Foam wheeled, cartridge-operated, not frost-resistant, stainless steel cylinder, depressurization valve for constant operating pressure, outside 3ltrs nitrogen bottle, high-pressure hose 5m with pistol, controllable discharge, chassis with guided wheel, vulcanite running wheels and carry handle

Operating Temperature : +5deg C to +60 deg C
Fire Rating : A B

STOCK CODE	BRIEF DESCRIPTION
ZMIS-JOC-ZFC50	JOCKEL, S50J, 3306535, FOAM WHEELED EXTINGUISHER, 50KG, CARTRIDGE OPERATED

FIRE DETECTION CONTROL SYSTEM

ITIM SYSTEM - FA2 & FA4

ITIM SYSTEMS PTY LTD

FA2 - TWO ZONE FIRE ALARM CONTROL MODULE

This compact, flush mount module provides two independently monitored Fire Alarm zones with individual isolate switches plus common test switch. Designed for use in catamarans with twin engine rooms or monohull vessels requiring engine room plus accommodation fire detection and alarms.

The compact sealed FA2 two zone Fire Alarm Control Module has a dash footprint of only 48 x 96mm, is flush mount & 125mm deep. The Full System Status Display is back illuminated by LED lightbars for instant status recognition.

Label options include - Engine room & Accommodation Engine rm & Ext release, and Port & Stbd Eng rm. The four sealed sealed touch switches provide reliable control even in dirty, dusty or wet enviroments.

The red common Test switch starts a testing sequence which simulates fault 1&2, isolated, normal, alarm 1, alarm2, alarm1&2, and dim conditions at the detector inputs to fully test all audible and visual alarms, fault monitoring circuits and remote alarm outputs. In operation, test the system on a regular basis. The green Dim switch dims the Green Normal status display for night time use. Alarm and Fault status displays are unaffected by the Dim switch.

FA2 - EXTERNAL CONNECTIONS

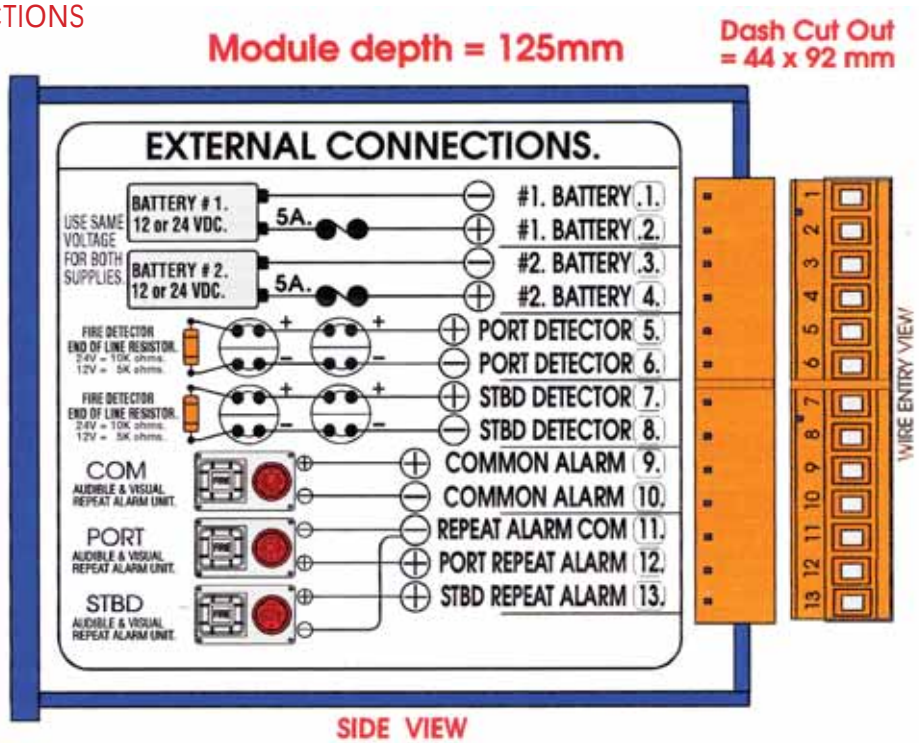

NOAH
For more information or order,
please contact our Sales Team at
Tel: **(65) 6266-0788** or E-mail: **sales@noah.com.sg**

FA4 - Four Circuit Fire Alarm & Control Panel

The FA4 is a very compact, flash mounted, fully monitored, Four Circuit, Fire Alarm & Control Module.

• LED Backlit System Status Display

Each zone is individually monitored for NORMAL, FIRE, ISOLATE and FAULT conditions. In additions, common ALARM TEST and FAULT TEST indicators, illuminate when these functions are active. The easy to read System Status Display, is backlit by colour coded LED light-bars for instantaneous status recognition.

• Compact Flush Mount Module

The FA4 Fire Alarm Control Module is very compact.
The panel facia measures only 96 x 96mm (less than 4 inches square).
The FA4 is flush mounted with a dash cut-out size of 91 x 91mm, and is secured by two adjustable mounting brackets off the rear of module. Overall panel depth = 175mm. All wiring terminates on two 12 way plug in terminals on the rear of the FA4 module.

FA4 - Wiring

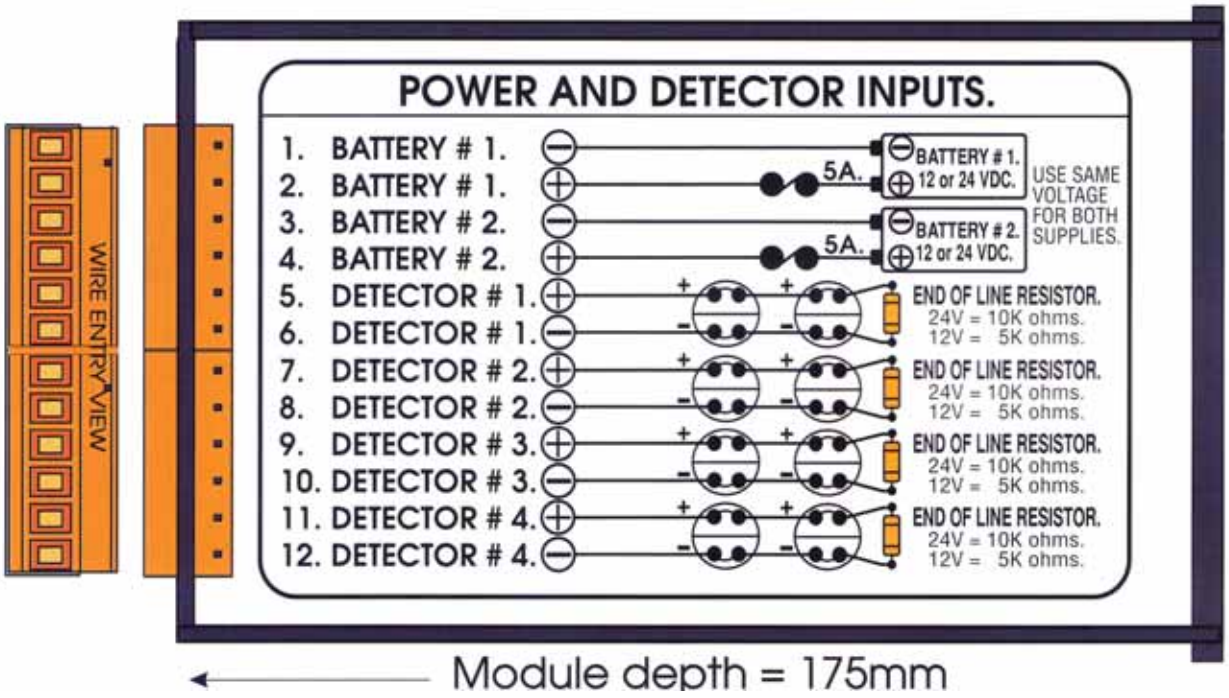

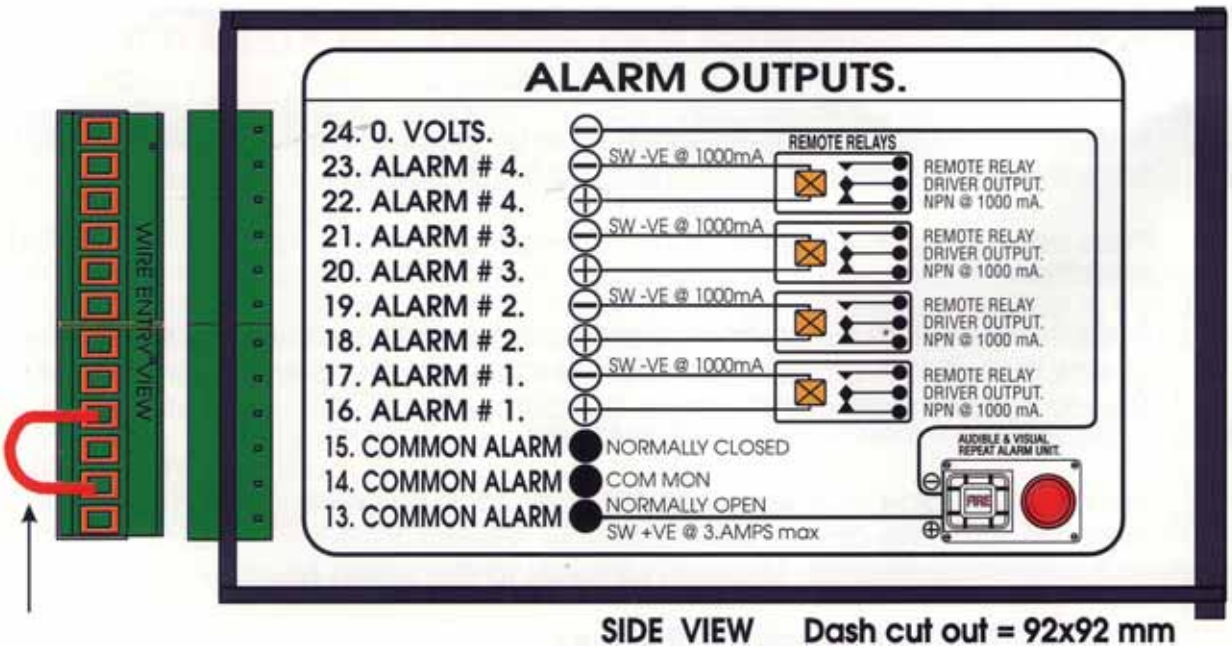

FIRE FIGHTING EQUIPMENT

Complete range of Fire Fighting Equipment available. For more details, please contact our sales personnel.

FFEQ-CHN-FPL40
FIREPROOF LINE

FFEQ-KID-DTECT
SMOKE DETECTOR

FFEQ-LCL-AXE1
INSULATED FIRE AXE, 14”

FFEQ-LCL-AXE2
WOODEN HANDLEAXE, AXE, 36” LONG

FFEQ-LCL-BLKT
FIRE BLANKET 4’X6’

FFEQ-LCL-BUCKT
FIRE BUCKET

FFEQ-LCL-XFBX2
4”X36” FIRE CONTROL PLAN CONTAINER

NOAH

For more information or order,
please contact our Sales Team at
Tel: **(65) 6266-0788** or E-mail: **sales@noah.com.sg**

HOSE & COUPLINGS & NOZZLES

UNIDUR HOSE

COUPLINGS

NOZZLE

SAFETY HELMETS

FIRE BRIGADE-HELMET CASCO PF 1000 PC

Norms: EN 443, DIN EN 136
Sizes: 52 – 62 cm
Weight: ca. 980 g
Temperatur resistance: 170° C
Colours: Yellow, luminous, light retentive colour

STOCK CODE	BRIEF DESCRIPTION
PPHE-TPA-HMT03	TEMPEX CASCO PF 1000 PC FIRE BRIGAGE HELMET C/W NECK PROTECT

BULLARD, LTX FIREFIGHTER HELMET

- Helmet shell of phenol textile with adjustable plastic interior fittings.

STOCK CODE	BRIEF DESCRIPTION
PPHE-LCL-XHMT3	BULLARD, LTX FIREFIGHTER HELMET C/W NECK PROTECT & 4" FACESHIELD, NFPAT

TEMPEX Safety Helmet

- Protection against high temperatures and splashing metal to EN 397 standard.
- For attaching the face shield to the safety helmet. The face shield can be adjusted to three postions and can be swung over the head. Anti-tilt design. Fits all commercially available helmets.

STOCK CODE	BRIEF DESCRIPTION
PPHE-TPX-HMT01	P/N 1028601 SAFETY HELMET BOP, SIZE: 003

NOAH

For more information or order,
please contact our Sales Team at
Tel: **(65) 6266-0788** or E-mail: **sales@noah.com.sg**

SPERIAN FENZY
Protection you can trust

SPERIAN – FENZY RANGE
SELF-CONTAINED BREATHING APPARATUS (SCBA)

FENZY AERIS TYPE II SCBA

Modular and adaptable, the fenzy aeris covers all the requirements of self-contained compressed air breathing apparatus wearers.

- Light weight, moulded anatomic non-metallic back plate
- High/medium pressure reducer easy & quick to service and adjust piston type, accepting 200 or 300 bar
- HP gauge & whistle alarm @ 90db fixed close to ear on the left shoulder strap
- Positive pressure demand valve fully automatic ~ no first breath required "Fenzy AirKlick" quick connect.

STOCK CODE	BRIEF DESCRIPTION
PICK-FZ1-BAAR1	SPERIAN, FENZY AERIS TYPE II SCBA, 30 MINS, 6LTRS/200BAR STEEL CYLINDER
PICK-FZ1-BAAR2	SPERIAN, FENZY AERIS TYPE II SCBA, 45 MINS, 6LTRS/300BAR STEEL CYLINDER
PICK-FZ1-BAAR3	SPERIAN, FENZY AERIS TYPE II SCBA, 45 MINS, 6.9LTRS/300BAR CARBON COMPOSITE CYLINDER

FENZY AERIS COMFORT SCBA

Fully modular and adaptable, the fenzy aeris comfort covers all the requirements of self-contained compressed air breathing apparatus wearers.

- Highly comfortable moulded anatomic non-metallic back plate
- Nomex® cushion on the shoulder straps and back-plate
- High/medium pressure reducer easy & quick to service and adjust piston type, accepting 200 or 300 bar
- HP gauge & whistle alarm @ 90db fixed close to ear on the left shoulder strap
- 2 Choices of positive pressure demand valve; first breath activated or fully automatic "Fenzy AirKlick" quick connect.

STOCK CODE	BRIEF DESCRIPTION
RESA-FZ1-BAAR-C	SPERIAN, FENZY AERIS COMFORT SCBA C/W BIOMASK PF FULLY AUTOMATIC

NOTE: WHEN ORDERING, PLEASE INDICATE YOUR CHOICE OF CYLINDER.

STOCK CODE	BRIEF DESCRIPTION
RESA-FZ1-CA060-20	SPERIAN, FENZY, 1819144, 6LTRS/200BAR ALUMINUM CYLINDER
RESA-FZ1-CS060-20	SPERIAN, FENZY, 1819119, 6LTRS/200BAR STEEL CYLINDER
RESA-FZ1-CS060-30	SPERIAN, FENZY, 1819137, 6LTRS/300BAR STEEL CYLINDER
RESA-FZ1-CC068-30	SPERIAN, FENZY, 1822211, 6.9LTRS/300BAR CARBON COMPOSITE CYLINDER

Fenzy X-Pro includes the latest innovations which can be found in an SCBA; its termocompressed harness is very comfortable with Kevlar® straps, Nomex® cushions, waist belt with quick release buckles and holder of the zenith or sx-pro demand valves.

- The back-plate of the Fenzy X-Pro is full anti-static, flame and fire resistant, it is also fully adjustable.
- The “Easydo” device of the back-plate allows a height adjustment in 2 easy and fast positions to adapt all sizes.
- Protection of the hoses
- Two strong side carrying handles
- Ergonomic movable shoulder plate
- Anti-static polimeric resin back-plate en137:2006 standard certified.

STOCK CODE	BRIEF DESCRIPTION
RESA-FZ1-BAXP	SPERIAN, FENZY X-PRO SCBA C/W OPTIPRO MASK & 1ST BREATH POSITIVE PRESSURE DEMAND VALVE

NOTE: WHEN ORDERING, PLEASE INDICATE YOUR CHOICE OF CYLINDER.

STOCK CODE	BRIEF DESCRIPTION
RESA-FZ1-CA060-20	SPERIAN, FENZY, 1819144, 6LTRS/200BAR ALUMINUM CYLINDER
RESA-FZ1-CS060-20	SPERIAN, FENZY, 1819119, 6LTRS/200BAR STEEL CYLINDER
RESA-FZ1-CS060-30	SPERIAN, FENZY, 1819137, 6LTRS/300BAR STEEL CYLINDER
RESA-FZ1-CC068-30	SPERIAN, FENZY, 1822211, 6.9LTRS/300BAR CARBON COMPOSITE CYLINDER

NOAH

For more information or order,
please contact our Sales Team at
Tel: **(65) 6266-0788** or E-mail: **sales@noah.com.sg**

RESPIRATORY - AIRLINE CONFIGURATION

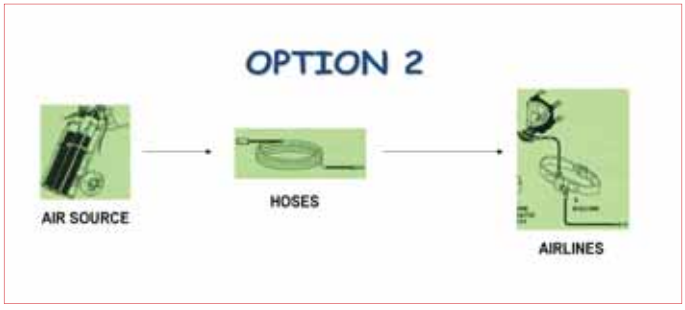

AIR SOURCE

STOCK CODE	BRIEF DESCRIPTION
(OPTION 1 - TRAVELPANEL) GDTR-B01-V50MP-A	SPERIAN, TRAVELPANEL 50MP, 54-50-121NR, CO, ALARM, YELLOW, NIMH
(OPTION 2 - TROLLEY) TRDG-LCL-ZZZ	AIR SUPPLY TROLLEY COMPLETE UNIT WITH 2 X 150 BAR/47 LITERS AIR CYLINDER

HOSES

STOCK CODE	BRIEF DESCRIPTION
RESA-FZ1-ALXHS-25	SPERIAN, FENZY MP AIR SUPPLY BLACK HOSE, NON-KINKING, 25 METERS
RESA-LCL-.....-	BREATHING AIR HOSE

COUPLINGS FOR HOSES

STOCK CODE	BRIEF DESCRIPTION
RESF-AIR-ALXCP-01	RBE06 MALE QUICK COUPLING WITH HOSE SERRATED END
RESF-AIR-ALXCP-02	RBE06 FEMALE QUICK COUPLING WITH HOSE SERRATED END
RESF-AIR-ALXCP-03	RBE06 FEMALE QUICK COUPLING WITH MALE G1/4

RBE06 MALE

RBE06 FEMALE

RBE06 FEMALE W/ MAKE G1/4

HOSES ACCESSORIES

STOCK CODE	BRIEF DESCRIPTION
RESA-STR-ALXRL-01	RECOILA SELF-RETRACTING HOSE REELS ONLY C/W WALL BRACKET
RESA-STR-ALXRL-02	T0118 FLOOR MOUNTING BRACKET FOR RECOILA REEL

NOAH

For more information or order,
please contact our Sales Team at
Tel: **(65) 6266-0788** or E-mail: **sales@noah.com.sg**

AIRLINE SETS

BIOLINE

Sperian Fenzy Bioline is charaterized by its positive pressure airline system, composed of a mask and a demand valve. This system allows all long-duration tasks in toxic or low-oxygen atmospheres.

FENZY AERIS AIRLINE PLUS

Versatile and adaptable, the FENZY AERIS AIRLINE PLUS covers all the requirements of every user of Self Contained Compressed Air Breathing Apparatus. Developed from a new system, the AERIS AIRLINE PLUS is based on a new High/Medium Pressure reducer, a new Harness and a new Pressure Gauge/Alarm assembly. The various models are all compatible with a complete range of accessories and three complete masks.

STOCK CODE	BRIEF DESCRIPTION
RESA-FZ1-ALBIO-A	SPERIAN FENZY BIOLINE, 1816054, C/W BELT, BIOMASK PF 5MB, DEMAND VALVE & CARRYING CASE
RESA-FZ1-ALARP-A	SPERIAN FENZY AERIS AIRLINE PLUS, 1816352, C/W BACKPACK, BIOMASK PF 5MB & DEMAND VALVE
RESA-FZ1-CS030-20	SPERIAN FENZY 3 LTRS/200BAR STEEL CYLINDER FOR AERIS AIRLINE PLUS

TROLLEY

The Sperian Fenzy air supply trolley is a mobile source of compressed breathable air for supplying airline type of breathing apparatus. It takes part in excellent conditions of comfort and safety for all long-duration tasks. It is used in toxic or low-oxygen (less than 17%) atmospheres and especially in nuclear power stations, tanks, furnaces, pits, containers, tunnels, etc..

One or two users may connect themselves at the same time to the Sperian Fenzy air supply trolley. This trolley can be either equipped with 2 or 4 cylinders from 6 upto 9 liters 200 bar or 300 bar with DIN/EN or NF Valve. The cylinders are used one after the other by means of an inverter in the manifold. They can be replaced during use, ensuring optimum real operating time. The Sperian Fenzy air supply trolley is equipped with 2 drums each containing 25 meters of medium-pressure hose. These two hoses can be connected to obtain a 50-meter hose to supply a single user.

STOCK CODE	BRIEF DESCRIPTION
RESA-FZ1-ALTRO-	SPERIAN FENZY CHARIOT AIR SUPPLY TROLLEY, 1823293 C/W 2 X 25 METERS BREATHING HOSES

NOAH
For more information or order,
please contact our Sales Team at
Tel: **(65) 6266-0788** or E-mail: **sales@noah.com.sg**

EMERGENCY ESCAPE BREATHING DEVICE (EEBD)

FENZY BIO-S-CAPE (ESCAPE BREATHING APPARATUS)

As defined under amendments to the International Convention for the Safety of Life at Sea (SOLAS), the legislation states that EEBD should offer supplied air or oxygen for at least 10 minutes and comprise a hood or full face piece which can be carried hands-free. When stored, it should be protected from the environment and provide brief, easy to follow instructions which are clearly visible. Flame resistant and incorporating a clear window for viewing, it should also be able to be carried hands free when inactivated. (Intended purely for escape from a hazardous area, EEBDs are not to be used for fighting fires or for entering oxygen deficient voids or tanks.) The IMO requirements are that all cargo ships carry two EEBDs in accommodation spaces and that passenger ships carry at least two EEBDs in main vertical zones. For ships carrying more than 36 passengers, two additional emergency escape sets will be required in each main vertical zone.

STOCK CODE	BRIEF DESCRIPTION
RESA-FZ1-EEBD1	SPERIAN, FENZY BIO-S-CAPE, 10 MINS EEBD, C/W 2LTRS/200BAR CYLINDER
RESA-FZ1-EEBD2	SPERIAN, FENZY BIO-S-CAPE, 15 MINS EEBD, C/W 3LTRS/200BAR CYLINDER

FENZY ANGEL II
(MONITORING & DISTRESS ALARM DEVICE)

Fenzy Angel II is made of 2 parts, has an unique design separating the system and the display. The weight of the display unit fixed on the strap has been reduced to a minimum.

- Two devices for a better distribution of weight and a better protection of the essential functions of the apparatus.
- Compact and ultra-light display device firmly fixed on the shoulder strap, with protected screen and automatic back light.
- Back plate device including the main electronics, the distress alarm and the black box.
- Automatic start at the opening of the cylinder
- Simultaneous display of all the information.
- Digital display: Duration, pressure, temperature
  Warnings: duration/pressure, temperature, motionless “Dead man”…..
- Black box: Data memorization for a recording duration of more than 10 years

STOCK CODE	BRIEF DESCRIPTION
RESE-FZ1-ZAGL2	SPERIAN FENZY ANGEL II MONITORING & DISTRESS ALARM DEVICE

FENZY ANGEL I (PERSONAL DISTRESS ALARM UNIT)

Fenzy Angel I is a versatile Personal Distress Signal Unit as it can be independently worn at the belt or connected to the MP rescue outlet for automatic activation.

- High intensity visual alarm and powerful acoustic alarm for various requests.
- Distress with a panic button, Motionless “Dead man”, Low battery
- Temperature alarm threshold 70 degC
- Integrated temperature sensor
- Integrated event logger (200 minutes with auto reset)
- Long duration Lithium battery (200 hours)

STOCK CODE	BRIEF DESCRIPTION
RESE-FZ1-ZAGL1	SPERIAN FENZY ANGEL I PERSONAL DISTRESS ALARM UNIT

NOAH

For more information or order,
please contact our Sales Team at
Tel: **(65) 6266-0788** or E-mail: **sales@noah.com.sg**

ALUMINUM CYLINDER

CARBON COMPOSITE

STEEL CYLINDER

SPARE CYLINDERS

STOCK CODE	BRIEF DESCRIPTION
RESA-FZ1-CA060-20	SPERIAN, FENZY, 1819144, 6LTRS/200BAR ALUMINUM CYLINDER
RESA-FZ1-CS060-20	SPERIAN, FENZY, 1819119, 6LTRS/200BAR STEEL CYLINDER
RESA-FZ1-CS060-30	SPERIAN, FENZY, 1819137, 6LTRS/300BAR STEEL CYLINDER
RESA-FZ1-CC068-30	SPERIAN, FENZY, 1822211, 6.9LTRS/300BAR CARBON COMPOSITE CYLINDER

ACCESSORIES

STOCK CODE	BRIEF DESCRIPTION
RESA-FZ1-BAXSP-02	SPERIAN, FENZY, 1830015, BREATHING APPARATUS SPECTACLES FRAME (TMR 48/21)
RESA-FZ1-BAX02	SPERIAN, FENZY, 1818267 BLACK PLASTIC CARRYING CASE FOR BA SET

Erie Medical · Resuscitator

The immediate availability of oxygen in a respiratory crisis cannot be over-emphasized. In fact, speed in which oxygen is administered may significantly improve the victims‘ chance for survival.

Features and benefits:

- Filled and ready to use with 406 liters of medical oxygen USP - Over 1 hour supply
- Durable carry case for easy wall mounting
- 6 liter fixed flow regulator
- Permanently attached on/off handle - No wrench needed
- Pressure gauge in cylinder post valve - Shows oxygen level in cylinder
- Medium concentration mask and 7‘ kink proof hose - Sanitary single patient use
- Refillable lightweight aluminum cylinder - Maximum economy
- Highly visible instructions
- Complete system weighs only 11.5 pounds
- Meets FDA requirements - Use without a prescription

STOCK CODE	BRIEF DESCRIPTION
RESA-ERI-PEOU1	ERIE MEDICAL, 488-53-2 OXYGEN UNIT C/W CYLINDER AND MOUTH TO MOUTH RESUSCITATOR KIT.

Erie Medical · Spare Cylinder

Spare cylinder with gauge and green handle.

STOCK CODE	BRIEF DESCRIPTION
RESA-ERI-PEOU1-01	ERIE MEDICAL, 407-127 SPARE CYLINDER WITH GAUGE AND GREEN HANDLE.

NOAH

For more information or order,
please contact our Sales Team at
Tel: **(65) 6266-0788** or E-mail: **sales@noah.com.sg**

JOCKEL®
To protect your life.

Jockel is your partner for fire extinguishers and fire fighting equipment.
Quality made in Germany!

Feuerschutz Jockel GmbH & Co. KG • 42897 Remscheid • Germany
Phone +49 (0) 2191 / 9667-0 • info@jockel.de • www.jockel.de

DATREX inc.
MARINE SAFETY EQUIPMENT

uvex
PROTECTING PEOPLE

Experience Innovation!
2010

NOAH

PERSONAL PROTECTIVE EQUIPMENT

PERSONAL PROTECTIVE EQUIPMENT

Noah is committed to providing safety for people on their job or away from their job.

Complete range of personal protective equipment from trusted and leading brands to protect people everywhere at work or where they are at risk of injury.

CONTENTS

PRODUCT CODE	PRODUCTS	PAGE
FALL	FALL PROTECTION - BODY HARNESS	200
PPEY	PERSONAL PROTECTION - EYE	202
PPFT	PERSONAL PROTECTION - FOOT	214
PPHA	PERSONAL PROTECTION - HAND	215
PPHE	PERSONAL PROTECTION - HEAD	220
PPHR	PERSONAL PROTECTION - EAR	221
RESF	RESPIRATORY - FILTERING	227

FALL PROTECTION - BODY HARNESS

SPERIAN
Protection you can trust

Full Body Harness
DL-30

- Simple one point cross over harness.
- Lightweight and easy to put on.

Full Body Harness
DL-31

- 2 Point Cross over harness.
- Comfortable, quick and easy to put on.
- Can be used in applications such as roof work, maintenance, construction and ladder climbing.

Full Body Harness
DL-35

- 3 Point Fall Arrest Harness with easy to adjust leg straps.
- Full Body harness with work positioning belt.

SPERIAN - FULL BODY HARNESS

STOCK CODE	BRIEF DESCRIPTION
FALL-BML-HDL30	"SPERIAN" DL-30 FULL BODY HARNESS, EN361 (REAR D-RING)
FALL-BML-HDL31	"SPERIAN" DL-31 FULL BODY HARNESS, EN361 (FRONT & REAR D-RING)
FALL-BML-HDL35	"SPERIAN" DL-35 FULL BODY HARNESS, EN361/ EN358 (FRONT, REAR & SIDE D-RING)

NOAH
For more information or order,
please contact our Sales Team at
Tel: **(65) 6266-0788** or E-mail: **sales@noah.com.sg**

Value

Shock-absorbing Lanyard DL-51

- Shock absorbing rope lanyard designed to secure the user by limiting the range of movement to prevent the possibility of a fall.
- Hook opening 60mm

Value

Connection Lanyard DL-55

- Polyester Rope Lanyard with double acting hook (19mm opening) one end and connection loop other end.
- No Energy Absorber.

Value

Connection Lanyard DL-56

- Polyester Rope Lanyard with double acting Scaffolding Hook (60mm opening) one end and connection loop other end.
- No Energy Absorber.

LANDYARDS / SHOCK ABSORBERS

STOCK CODE	BRIEF DESCRIPTION
FALL-BML-HSAB1	"SPERIAN" DL-51 SHOCK ABSORBING LANYARD, 2MTR LANYARD (12MM DIA) WITH SCAFFOLDING HOOK & LOOP, EN355/EN354
FALL-BML-HLY02	"SPERIAN" DL-55, 2MTR LANYARD (12MM DIA) WITH SNAP HOOK & LOOP, EN354
FALL-BML-HLY03	"SPERIAN" DL-56, 2MTR LANYARD (12MM DIA) WITH SCAFFOLDING HOOK & LOOP, EN354

PERSONAL PROTECTION - EYE

SPERIAN
Protection you can trust

SPERIAN - EYE PROTECTION

STOCK CODE	BRIEF DESCRIPTION
PPEY-PUL-GLG20	"SPERIAN" P/N: 1005509, LG20 GOGGLES, CLEAR LENS
PPEY-PUL-S4947	"SPERIAN" P/N: 1004947, OP-TEMA SPECTACLE, CLEAR LENS
PPEY-PUL-S4948	"SPERIAN" P/N: 1004948, OP-TEMA SPECTACLE, GREY LENS

LG20 GOGGLES - CE EN 166 Standard

- Impact-resistant polycarbonate lens for flying particles, coarse dusts, liquid droplets mist & sprays
- Lightweight design
- Soft seal and easily adjustable headband fits a wide variety of workers
- Chemistry version with an acetate Fog-Ban Lens
- Polycarbonate lens, Class 1 optical quality
- Anti-Fog, Anti-Scratch & Indirect Ventilation

LG20

OP-TEMA Spectacles, Clear lens

OP-TEMA Spectacles, Clear fog-ban lens - CE EN 166 standard

- Lightweight full view lens
- Bulit-in moulded browbar,Soft, adjustable nosepiece
- Adjustable temple length and lens angle, Abrasion-resistant polycarbonate lens
- Adjustable break-away Flexicord retainer for added security

OP-TEMA Spectacles, TSR Grey fog-ban lens - CE EN 166 standard

- Lightweight full view lens
- Bulit-in moulded browbar,Soft, adjustable nosepiece
- Adjustable temple length and lens angle, Abrasion-resistant polycarbonate lens
- Adjustable break-away Flexicord retainer for added security

OP-TEMA Spectacles, Grey lens

NOAH

For more information or order,
please contact our Sales Team at
Tel: **(65) 6266-0788** or E-mail: **sales@noah.com.sg**

VISIOTG-A Over-The-Glasses, Clear lens

VISIOTG-A Over-The-Glasses Spectacle, Clear lens

- Wraparound spectacle providing a wide field of view and easy fit over prescription eyewear.
- Asian face design
- Durable, abrasion-resistant polycarbonate lenses
- Indirect vents helps prevent fogging (anti-fog)
- Single polycarbonate lens with intergral sideshields and contoured nose bridge
- Provides 99.9% UV protection
- Light, balanced frame that feels virtually weightless

SC1-A Spectacles, Clear lens

SC1-A Spectacles, Clear lens

- Wraparound spectacle providing a wide field of view and easy fit over prescription eyewear:
- Durable lens with special scratch-resistant Hardcoat & Fog-Ban anti-fog coating.
- Durable black nylon frame
- Adjustable positive-lock temples provide individual fit
- Perforated temples for addition of safety cord

VL1-A Spectacles, Clear lens

- Sporty, functional,affordable
- Asian face design
- Lightweight full view lens
- Durable lens with special scratch-resistant Hardcoat & Fog-Ban anti-fog coating
- Soft temple tips

VL1-A Spectacles, TSR Grey lens

- Sporty, functional,affordable
- Asian face design
- Lightweight full view lens
- Durable lens with special scratch-resistant Hardcoat & Fog-Ban anti-fog coating
- Soft temple tips

VL1-A Spectacles, Clear lens

VL1-A Spectacles, Grey lens

STOCK CODE	BRIEF DESCRIPTION
PPEY-PUL-S0002	"SPERIAN" P/N:100002, VISIOTG-A OVER THE GLASSES, CLEAR LENS
PPEY-PUL-S0010	"SPERIAN" P/N: 100010, SC1-A SPECTACLES, CLEAR LENS
PPEY-PUL-S0020	"SPERIAN" P/N: 100020, VL1-A SPECTACLE, CLEAR LENS
PPEY-PUL-S0021	"SPERIAN" P/N: 100021, VL1-A SPECTACLE, GREY LENS

PULSAFE - CLEANING KITS (Alcohol And Silicone Free)

STOCK CODE	BRIEF DESCRIPTION
PPEY-PUL-11378	"SPERIAN" PULSAFE P/N 1011378, 16OZ SPRAY BOTTLE LENS CLEANER
PPEY-PUL-11379	"SPERIAN" PULSAFE P/N 1011379, CLEAR LENS TISSUE
PPEY-PUL-11380	SPERIAN PULSAFE P/N 1011380, CLEAR DISPOSAL STATION
PPEY-PUL-Z1332	"SPERIAN" PULSAFE P/N 1011332, CLEAR TOWELETTES DISPENSER (100)

SPRAY BOTTLE LENS CLEANER

CLEAR LENS TISSUE

CLEAR DISPOSAL STATION

CLEAR TOWELETTES DISPENSER

NOAH

For more information or order,
please contact our Sales Team at
Tel: **(65) 6266-0788** or E-mail: **sales@noah.com.sg**

9301-906

UVEX ULTRAVISION · 9301

Comfortable, ergonomically designed full vision goggle with unrestricted side visibility provided by 180° panorama lens. Soft face and nose cushioning enables totally airtight and pressure-free fit. Exceptional wearer comfort guaranteed by unrivalled design, broad and fully adjustable headband, sophisticated ventilation system and optional non-fog lens. Easily replaceable lens. Special versions are available featuring tear-off lenses, additional comfort cushioning, flame-retarding PVC in signal red.

Remark: PC lenses do not fit into CA bodies (and vice versa)

9301-603

9301-317
mouth protection

STOCK CODE	BRIEF DESCRIPTION
PPEY-UVX-GAA01	UVEX, 9301-906 ULTRAVISION GOGGLES LENS: CA CLEAR (CELLULOSE ACETATE) FRAME: TRANSPARENT GREY LENS COATING: SUPRAVISION HC/AF, NON-FOGGING - ANTI-SCRATCH OUTSIDE & ANTI-FOG INSIDE, 100% UV PROTECTION - SUITABLE FOR USE WITH PRESCRIPTION GLASSES & RESPIRATOR
PPEY-UVX-GAA03	UVEX, 9301-603 ULTRAVISION GOGGLES, RED, **GASTIGHT** LENS: PC CLEAR FRAME: RED LENS COATING: UV 2-1,2, SUPRAVISION HC/AF - ANTI-SCRATCH OUTSIDE & ANTI-FOG INSIDE, 100% UV PROTECTION - NON-VENTED - SUITABLE FOR USE WITH PRESCRIPTION GLASSES
PPEY-UVX-GAAX1	UVEX, 9301-317 MOUTH PROTECTION, PC CLEAR FOR ALL 9301 THE FACE PROTECTION IS NOT A BREATHING FILTER - ITS PROTECTING AGAINST COARSE DIRT PARTICLES ONLY.

UVEX ULTRASONIC · 9302

Pioneering full vision goggle with exceptional wearer comfort. The combination of two different materials (hard/soft components) means that pressure never becomes a problem, even after long periods of wear. The soft flexible component adapts to individual face curvature, providing complete side protection even over prescription spectacles. The outstanding ventilation ensures a pleasant non-irritating interior environment. Further key features of this top goggle include sporty design, panorama field of vision and easy lens replacement.

STOCK CODE	BRIEF DESCRIPTION
PPEY-UVX-GAB01	UVEX, 9302-245 ULTRASONIC GOGGLES, ORANGE/GREY, LENS: PC CLEAR LENS COATING: UV 2-1,2, SUPRAVISION HC/AF - ANTI-SCRATCH OUTSIDE & ANTI-FOG INSIDE, 100% UV PROTECTION - SUITABLE FOR USE WITH PRESCRIPTION GLASSES

NOAH

For more information or order,
please contact our Sales Team at
Tel: **(65) 6266-0788** or E-mail: **sales@noah.com.sg**

9160-065

9160-285

9160-068

UVEX I-VO · 9160

UVEX I-VO, the „eye-volution" in protective eyewear. When it comes to comfort and looks, i-vo does not compromise, making these spectacles incredibly popular among wearers. They are not only uncompromisingly safe but also excellent in terms of comfort and design. This is guaranteed because of uvex's duo component technology, which ensures that the spectacles not only tough, but also smart. Soft components around the sensitive parts of the face (nose, forehead, ears) guarantee permanent maximum comfort.

STOCK CODE	BRIEF DESCRIPTION
PPRY-UVX-SAA01	UVEX, 9160-065 I-VO SPECTACLE, BLUE/ORANGE LENS: PC CLEAR LENS COATING: UV 2-1,2, OPTIDUR NC - ANTI-SCRATCH OUTSIDE, HIGHLY RESISTANT TO CHEMICAL, NON- STICK PROPERTIES, 100% UV PROTECTION - ADJUSTABLE SIDE-ARM, LENGTH ADJUSTMENT & PADS FOR PRESSURE-FREE FIT
PPRY-UVX-SAA02	UVEX, 9160-068 I-VO SPECTACLE, BLUE/ORANGE LENS: PC SCT BROWN LENS COATING: UV 5-2,5, SUNGLARE FILTER, OPTIDUR NC - ANTI-SCRATCH OUTSIDE, HIGHLY RESISTANT TO CHEMICAL, NON-STICK PROPERTIES, 100% UV PROTECTION - BROWN LENS ARE SUNGLARE FILTER THAT DO NOT RESTRICT THE ABILITY TO RECOGNISE STRIKING COLOURS - ADJUSTABLE SIDE-ARM, LENGTH ADJUSTMENT & PADS FOR PRESSURE-FREE FIT
PPRY-UVX-SAA03	UVEX, 9160-285 I-VO SPECTACLE, BLUE/GREY LENS: PC CLEAR LENS COATING: UV2-1.2, SUPRAVISION HC-AF - ANTI-SCRATCH OUTSIDE & ANTI-FOG INSIDE, 100% UV PROTECTION - ADJUSTABLE SIDE-ARM, LENGTH ADJUSTMENT & PADS FOR RESSURE FREE FIT

UVEX SKYLITE · 9174

Weighting a mere 26g, this spectacle is the lightest of its type. Fashionable design with sport-style temples. Adjustable temple inclination. Extremely impact-resistant polycarbonate lens provides 100 % UV protection. Frosted side shields integrated into the lens. Only available with ultradura coating.

STOCK CODE	BRIEF DESCRIPTION
PPEY-UVX-SAE01	UVEX, 9174-465 SKYLITE SV SPECTACLE, BLUE, LENS: PC CLEAR LENS COATING: UV 2-1,2, SUPRAVISION HC/AF ANTI-SCRATCH (HARD COAT) OUTSIDE, ANTI-FOG INSIDE, 100% UV PROTECTION.

UVEX SKYPER SX2 · 9197

Extremely lightweight and modern safety spectacle with outstanding field of vision and exceptional adaptability. The temples are individually adjustable in 5 different positions with integrated stop lock. Their softness ensures a pressure-free fit and their inclination can be finely adjusted. Lens and frame made from extremely impact-resistant plastic. Spectacle provides maximum UV protection.

STOCK CODE	BRIEF DESCRIPTION
PPEY-UVX-SAF02	UVEX, 9197-880 SKYBRITE SX2 SPECTACLE, SILVER LENS: PC CLEAR LENS COATING: UV 5-1,7 SUNGLARE FILTER, OPTIDUR NC, SILVER MIRROR - ANTI-SCRATCH OUTSIDE, HIGHLY RESISTANT TO CHEMICAL, NON-STICK PROPERTIES, 100% UV PROTECTION - GOOD FOR INDOOR/OUTDOOR - ADJUSTABLE SIDE-ARM, LENGTH ADJUSTMENT
PPEY-UVX-SAF03	UVEX, 9197-266 SKYPER SX2 SPECTACLE, BLUE, LENS: PC GREY/SUNGLARE FILTER LENS COATING: UV 5-2,5, SUPRAVISION HC-AF - ANTI-SCRATCH (HARD COAT) OUTSIDE, ANTI-FOG INSIDE, 100% UV PROTECTION. - ADJUSTABLE SIDE-ARM, LENGTH ADJUSTMENT - GREY LENS ARE SUNGLARE FILTER THAT DO NOT RESTRICT THE ABILITY TO RECOGNISE STRIKING COLOURS
PPEY-UVX-SAF04	UVEX, 9197-835 SKYPER SX2 SPECTACLE, BLUE, LENS: PC CLEAR LENS COATING: UV 2-1,2, THS - PERMANENT DURABLE NON-FOGGING AND SCRATCH RESISTANT COATING ON BOTH SIDES OF THE LENS. 100% UV PROTECTION. - ADJUSTABLE SIDE-ARM, LENGTH ADJUSTMENT

NOAH

For more information or order,
please contact our Sales Team at
Tel: **(65) 6266-0788** or E-mail: **sales@noah.com.sg**

UVEX SUPER G · 9172

This exciting eyewear concept unites innovative technologies and high-tech materials.

THE LENS

Using state-of-the-art manufacturing processes, an extremely thin lens with exceptional optical clarity can be created. The lenses have ideal aerodynamics and are angled forwards to provide excellent ventilation, keeping the eyes comfortable.

THE FRAME

The frame is made of ultra light, high-tech polymers, guaranteeing maximum flexibility. The innovative side piece concept features uvex x-stream-technology for an excellent, non-slip fit and a wide range of applications.

THE RESULT

The super g is completely metal-free and provides top-level protection – and all that at only 18 g!

STOCK CODE	BRIEF DESCRIPTION
PPEY-UVX-SAG01	UVEX, 9172-265 SUPER G SPECTACLE, NAVY BLUE, LENS: PC CLEAR LENS COATING: UV 2-1,2, SUPRAVISION HC/AF - ANTI-SCRATCH (HARD COAT) OUTSIDE, ANTI-FOG INSIDE, 100% UV PROTECTION. - GOOD FOR INDOOR AND OUTDOOR - THE LIGHTEST SAFETY GLASSES IN THE WORLD

Through “ADVANCED OPTICS BY SCIENCE”, uvex has initiated an independent research project which focuses on optimal definition and mechanical protection effects. Our objective is to develop eye-wear which provides perfect protection whilst at the same time facilitating perfect vision. The optical characteristics of the new lenses are similar to those of “air”.

This has led to the creation of a new class for protective eyewear with wavefront- optimised lens technology: uvex hi-res. Aberrations are reduced to a minimum and provide maximum vision quality. We have made “rapid scientific advances”, part and parcel of our development and production processes.

The advantages are obvious:

- With wavefront-optimised protective eyewear, employees can work for longer periods of time without suffering the symptoms of fatigue.
- The ability to maintain concentration levels is enhanced
- The risk of accidents and errors is therefore reduced.

Advanced Optics by Science

Researching, developing and protecting.

See for yourself what an impact our wavefront-optimised lens technology has on clear vision.

Definition without uvex hi-res

Definition with uvex hi-res

UVEX SUPER OTG · 9169

With its ADVANCED OPTICS BY SCIENCE technology, uvex is exploring new avenues in the development of optical reproduction properties above and beyond the current standards. uvex super OTG boasts uvex’s cutting-edge lens technology.

It also features hingeless side pieces made of extremely impact-resistant Grilamid® with soft ear pieces. It therefore combines the benefits of temple glasses with the comfort of a headband. The flexible side piece concept means the glasses can be adapted to different wearing scenarios, regardless of whether they are worn together with prescription glasses or not.

STOCK CODE	BRIEF DESCRIPTION
PPEY-UVX-SAJ01	UVEX, 9169-065 SUPER OTG, NAVY BLUE LENS: PC CLEAR LENS COATING: UV 2-1.2, OPTIDUR NC/UVEX HI-RES - EXTREMELY SCRATCH-RESISTANT, HIGHLY RESISTANT TO CHEMICALS, EASY TO CLEAN (NANOTECHNOLOGY), 100% UV PROTECTION - UVEX HI-RES = PROVIDE MAXIMUM VISION QUALITY (LENS CLARITY)
PPEY-UVX-SAJ02	UVEX, 9169-081 SUPER OTG, BLACK LENS: PC GREY LENS COATING: SUNGLARE FILTER 5-2.5, OPTIDUR NC/UVEX HI-RES EXTREMELY SCRATCH-RESISTANT, HIGHLY RESISTANT TO CHEMICALS, EASY TO CLEAN (NANOTECHNOLOGY), 100% UV PROTECTION UVEX HI-RES = PROVIDE MAXIMUM VISION QUALITY (LENS CLARITY

NOAH

For more information or order,
please contact our Sales Team at
Tel: **(65) 6266-0788** or E-mail: **sales@noah.com.sg**

UVEX · 9162

Very comfortable welding shade cover spectacle made from polycarbonate. Provides unrestricted lateral vision and fits over most prescription spectacles.

Outstanding pressure-free fit with uvex duoflex temples. Special temple design ensures effective indirect ventilation plus exceptional side protection.

4 individual temple length settings. Polycarbonate lens with frosted brow guard.

STOCK CODE	BRIEF DESCRIPTION
PPEY-UVX-SAH01	UVEX, 9162-044 OTG SPECTACLE, BLACK/BLACK, LENS: PC GREEN LENS COATING: WELDING SHADE 4, INFRADUR PLUS - WELDING LENSES PROTECT AGAINST ULTRAVIOLET & INFRA-RED RADIATION AS WELL AS GLARE, MINIMISES WELDING SPARK DAMAGE - LENGTH ADJUSTMENT, PADS FOR PRESSURE-FREE FIT - FITS OVER MOST PRESCRIPTION SPECTACLES.

UVEX SPEED · 9129-005

Compact twin-lens glasses with very soft nose cushioning for real comfort. The glasses fit snugly thanks to integrated extensions around the eyebrows and cheeks. With sporty-style side pieces and a straight outer curve, the glasses are very flat, making them very easy to carry around.

STOCK CODE	BRIEF DESCRIPTION
PPEY-UVX-S9129	UVEX, 9129-005 SPEED, GREY-TRANSPARENT, BRIDGE SIZE, SPORTY SIDE PIECE AND SOFT NOSE CUSHION

UVEX METEOR · 9134-290

Comfortable twin-lens spectacles with excellent brow and cheek guards. Adjustable side pieces for individual adaptation to the wearer's head shape.
The anatomically shaped nose cushioning guarantees a secure and comfortable fit, even when worn for extended periods. The spectacles are very flat and will therefore fit nicely in a breast pocket.

STOCK CODE	BRIEF DESCRIPTION
PPEY-UVX-S9134-NL	UVEX, 9134-290 METEOR, SMOKEY GREY, KM 56-15, EXCELLENT BROW AND CHECK GUARDS WITH ADJUSTABLE SIDE PIECE

NOAH

For more information or order,
please contact our Sales Team at
Tel: **(65) 6266-0788** or E-mail: **sales@noah.com.sg**

UVEX CLEANING STATION · 9970-002

Plastic uvex cleaning station for wall mounting. This lightweight and aesthetically pleasing cleaning station is a real eye-catcher for your production plants. It enables your employees to improve their own safety with a clear field of vision as well as make their protective glasses last that much longer by means of a regular, simple and uncomplicated cleaning process.

For filling with silicone-free uvex cleaning paper 9971-000, uvex cleaning fluid 9972-100, and plastic pump 9973-100.

STOCK CODE	BRIEF DESCRIPTION
PPEY-UVX-X9970	9970-002 CLEANING STATION WALL-MOUNT TYPE CONSIST OF: A) 1 X PN 9973-100 PLASTIC PUMP B) 1 X PN 9972-100 CLEANING SOLUTION FLUID 0.5L C) 2 X PN 9971-000 CLEANING TISSUES (DIMENSION: 46CML X 13CMW X 23CMH)
PPEY-UVX-X9970-01	9971-000 REFILL, SILICONE-FREE CLEANING TISSUES (24 PACKS PER CASE)
PPEY-UVX-X9970-01	9972-100 0.5L CLEANING SOLUTION (15 BOTTLES PER CASE)
PPEY-UVX-X9970-03	9973-100 PLASTIC PUMP FOR P/N 9972-100 SOLUTION (100 PCS PER CASE)

9971-000

Refill pack of silicone-free cleaning tissues, approx. 700 sheets. Suitable for all lenses!

9972-100

0.5 l cleaning solution. Suitable for all lenses!

9973-100

Plastic pump for uvex cleaning solution 9972-100.

PERSONAL PROTECTION - FOOT

ONGUARD SAFETY BOOTS

- 11“ boot height
- Steel toe complies with ASTM F2413-05 and CSA Z195
- One piece injection molded with no buttons or elastic bands to break, and easier decontamination
- Large kick-off lug for easy removal
- Excellent slip ressistance
- Wider across the gate tallow for easy entry into the boot while wearing a chemical protective suit
- New non-slip EZ decon outsole for easier decontamination and clean-up
- Easier to don and doff when wearing a chemical protective suit
- Steel toe, steel shank, and steel midsole for complete protection

STOCK CODE	BRIEF DESCRIPTION
PPFT-LKL-BOT01-12	"ONGUARD" SKU87015 HAZMAX EZ-FIT BOOT, SIZE: 12, 11" BOOT HEIGHT

TEMPEX®

TEMPEX SAFETY BOOTS DIN EN 345

Contact heat-resistand up to 300°C. Shaft height approx. 26cm. Front and heel section made of alumnised full cowhide, shaft made of graind cowhide. With leather insole and replaceable, washable insert. Red nitrile sole with heat-insulating bed, Sole stitching with NOMEX specialty thread. Soft leather insert in calf area with adjustable double quick-fastener.

STOCK CODE	BRIEF DESCRIPTION
PPFT-TPX-BOT02-43	P/N 0685006 SAFETY BOOTS, SIZE: 43 (09)
PPFT-TPX-BOT02-44	P/N 0685006 SAFETY BOOTS, SIZE: 44 (10)

NOAH

For more information or order,
please contact our Sales Team at
Tel: **(65) 6266-0788** or E-mail: **sales@noah.com.sg**

PERSONAL PROTECTION - HAND

COMASEC

MULTIPLUS CHEMICAL GLOVES

- Supported PVC formulation glove with double-dip granite finish
- 100% Cotton interlock liner
- Excellent resistance to Chemical Destruction offering protection against cutting oil, petrol and by-products, bases, acids, including those in the solvent
- Anatomical shape for increased dexterity and comfort
- Excellent resistance to abrasion and tear

STOCK CODE	BRIEF DESCRIPTION
PPHA-CMS-MP27-08	COMASEC MULTIPLUS 27 CHEMICAL GLOVE, 00314E02, PVC/NITRILE, SIZE:8
PPHA-CMS-MP27-09	COMASEC MULTIPLUS 27 CHEMICAL GLOVE, 00314E03, PVC/NITRILE, SIZE:9
PPHA-CMS-MP27-10	COMASEC MULTIPLUS 27 CHEMICAL GLOVE, 00314E04, PVC/NITRILE, SIZE:10
PPHA-CMS-MP40-08	COMASEC MULTIPLUS 40 CHEMICAL GLOVE, PVC/NITRILE, SIZE:8
PPHA-CMS-MP40-09	COMASEC MULTIPLUS 40 CHEMICAL GLOVE, PVC/NITRILE, SIZE:9
PPHA-CMS-MP40-10	COMASEC MULTIPLUS 40 CHEMICAL GLOVE, PVC/NITRILE, SIZE:10

COMATRIL CHEMICAL GLOVES

- Flock lined 100% coton nitrile formula glove.
- Open cuff allows ventilation to keep hand cool.
- Raised diamond pattern.
- Double wall thickness : 0.84 mm approximately
- Excellent resistance to many solvents and oil based chemicals.
- Very good abrasion resistance.
- Flexible and comfortable for an excellent dexterity
- Superior raised grip pattern for safety handlings.
- In compliance with the standards EN420 (General requirements), EN388 (Mechanical Hazards) and EN374 (Chemical and Micro-organisms Hazards) by the notified laboratory BSI.
- Manufactured under EC quality assurance system carried out by the BSI.

STOCK CODE	BRIEF DESCRIPTION
PPHA-CMS-CMT30-07	COMASEC COMATRIL 30 GLOVE, 15G7E53000, 100% COTTON NITRILE, SIZE: 7.5
PPHA-CMS-CMT30-08	COMASEC COMATRIL 30 GLOVE, 15G7E54000, 100% COTTON NITRILE, SIZE: 8.5
PPHA-CMS-CMT30-09	COMASEC COMATRIL 30 GLOVE, 15G7E55000, 100% COTTON NITRILE, SIZE: 9.5

TEMPEX® AUSTRIA

TEMPEX, P/N 41015, “BOMBERO“ FIRE BRIGADE 5-FINGERS GLOVES

Palm, thumbs and fingers made of Kevlar® silicone/carbon composite
hand and finger back made of Nomex® Delta TA or PBI
high-quality, tear proof climate membrane inner glove made of Kevlar® fabric

STOCK CODE	BRIEF DESCRIPTION
CLFF-TPA-FGLV1	TEMPEX, P/N 41015, "BOMBERO" FIRE BRIGADE 5-FINGERS GLOVES

NOAH

For more information or order,
please contact our Sales Team at
Tel: **(65) 6266-0788** or E-mail: **sales@noah.com.sg**

UVEX HELIX C5 · 60492 / 60494

Cut-protection safety gloves with Bamboo TwinFlex® technology.

Characteristics:
- patented uvex Profas Bamboo TwinFlex® technology
- innovative SoftGrip coating
- very high cut-protection (Cut 5)
- highest wearing comfort due to uvex climatec®
- outstanding tactile feel
- high abrasion-resistance
- flexible
- silicone-free according to imprint test

Performance:
- Highest level of cut protection (level 5)
- Highest level of abrasion resistance (level 4)
- Certified according to oeko tex standard 100

STOCK CODE	BRIEF DESCRIPTION
PPHA-UVX-MHLX1-A	UVEX, 60494, HELIX C5, 5-FINGER GLOVES, 27CM, FOAM, SIZE: 07
PPHA-UVX-MHLX1-B	UVEX, 60494, HELIX C5, 5-FINGER GLOVES, 27CM, FOAM, SIZE: 08
PPHA-UVX-MHLX1-C	UVEX, 60494, HELIX C5, 5-FINGER GLOVES, 27CM, FOAM, SIZE: 09
PPHA-UVX-MHLX1-D	UVEX, 60494, HELIX C5, 5-FINGER GLOVES, 27CM, FOAM, SIZE: 10
PPHA-UVX-MHLX2-A	UVEX, 60492, HELIX C5, 5-FINGER GLOVES , 27CM , WET , SIZE : 07
PPHA-UVX-MHLX2-B	UVEX, 60492, HELIX C5, 5-FINGER GLOVES , 27CM , WET , SIZE : 08
PPHA-UVX-MHLX2-C	UVEX, 60492, HELIX C5, 5-FINGER GLOVES , 27CM , WET , SIZE : 09
PPHA-UVX-MHLX2-D	UVEX, 60492, HELIX C5, 5-FINGER GLOVES , 27CM , WET , SIZE : 10

Article no.:	helix® C5 wet	helix® C5 foam
EN:	388 (4 5 4 2)	388 (4 5 4 2)
Sizes:	7, 8, 9, 10	7, 8, 9, 10
Length approx.:	27 cm	27 cm
Construction:	Five-finger glove, ribbing, palm and fingertips coated	Five-finger glove, ribbing, palm and fingertips coated
Base glove:	Bamboo-rayon/ Dyneema®/glass/polyamide	Bamboo-rayon/ Dyneema®/glass/polya-mide
Coating:	High Performance Elastomer (HPE) wet	High Performance Elasto-mer (HPE), SoftGrip foam
Colour:	lime/anthracite	lime/anthracite
Resistance:	oil- and grease-resistant	moisture-resistant
Model:	60492	60494

TEXTILES VERTRAUEN Schadstoffgeprüftes Textilien nach Öko-Tex Standard 100

climatec®

MADE IN GERMANY

Bamboo TwinFlex® Technology

*The patented **Bamboo TwinFlex®** protective function: cut-resistant glass fibres and abrasion-resistant polyamide guarantee optimum mechanical protection.*

*The patented **Bamboo TwinFlex®** comfort function: soft, comfortable bamboo thread for a silky feel and perfect temperature regulation combined with robust Dyneema® fibres for high tear resistance.*

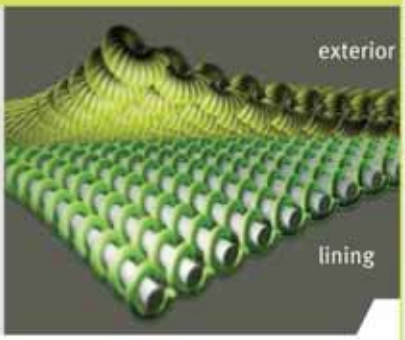

Double-face principle

Polyamide (abrasion resistance)

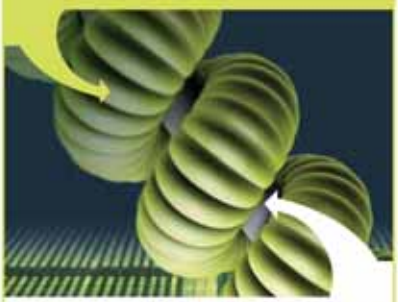

Glass (cut protection level 5)

Bamboo (comfort)

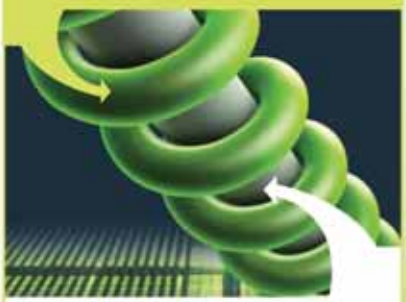

Dyneema® (tear resistance)

Reduced sweating

Much higher moisture absorption than other yarns

High breathability

climatec®

Bamboo TwinFlex® Technology –

High-tech for more comfort

We take your safety very seriously and this is why we manufacture temperature-regulating and skin-friendly products that provide perfect protection. That's what uvex climatec® and Oeko-Tex Standard 100 represent.

The patented Bamboo TwinFlex® Technology combines state-of-the-art, cut-resistant hybrid yarns with bamboo comfort fibres modelled on a helix. The helix® C5 range offers the highest level of cut protection (level 5), the highest level of abrasion resistance and outstanding wearer comfort. The skin only comes into contact with temperature-regulating bamboo comfort fibres.
The helix® C5 range is certified in accordance with Oeko-Tex Standard 100.

TEXTILES VERTRAUEN
Schadstoffgeprüfte Textilien
nach Öko-Tex Standard 100
STFI - Prüf-Nr. 502-0648-FI Hohenstein

Robust and comfortable

Cooling effect

Bamboo – environmentally sustainable raw material

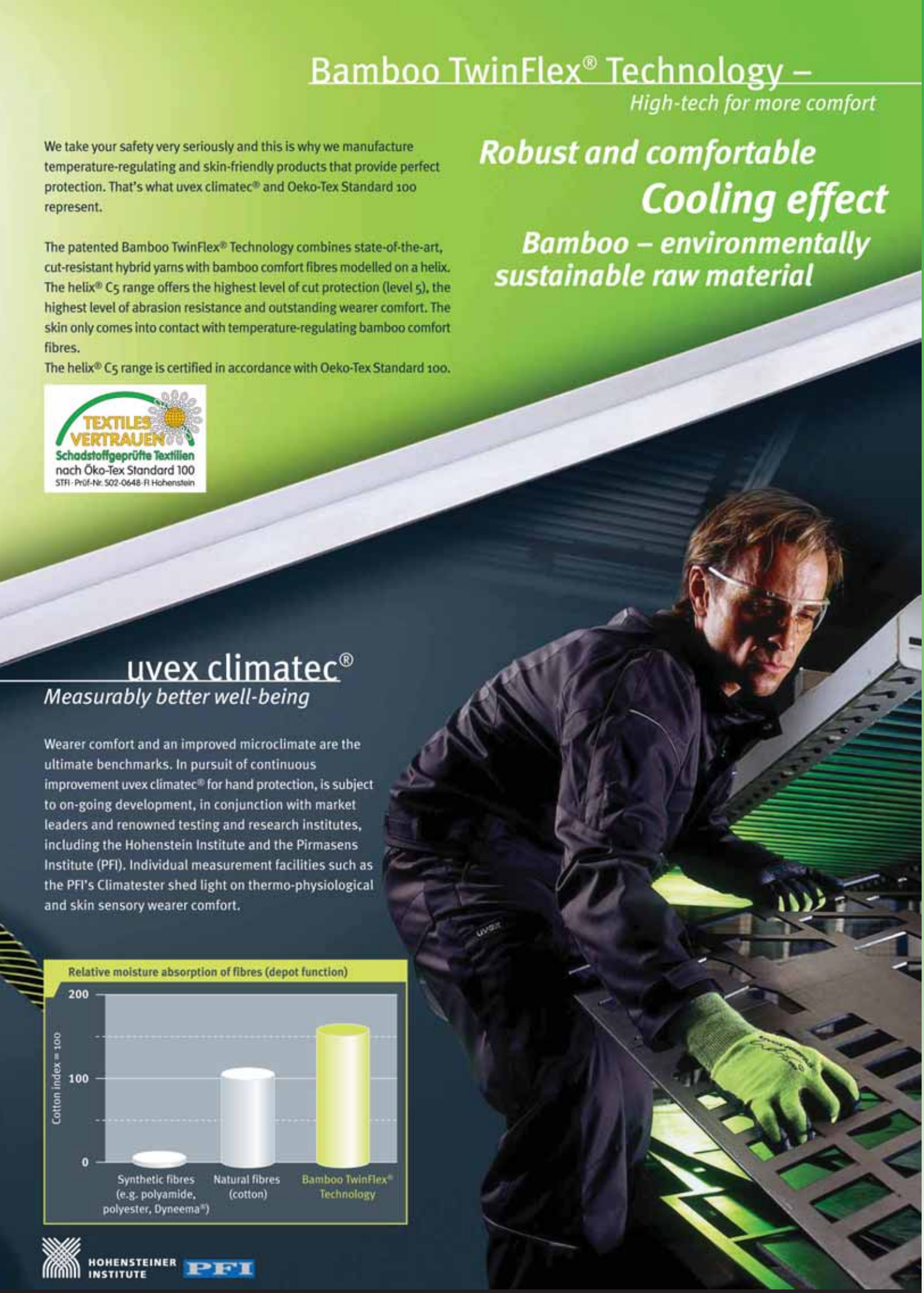

uvex climatec®

Measurably better well-being

Wearer comfort and an improved microclimate are the ultimate benchmarks. In pursuit of continuous improvement uvex climatec® for hand protection, is subject to on-going development, in conjunction with market leaders and renowned testing and research institutes, including the Hohenstein Institute and the Pirmasens Institute (PFI). Individual measurement facilities such as the PFI's Climatester shed light on thermo-physiological and skin sensory wearer comfort.

HOHENSTEINER INSTITUTE PFI

PERSONAL PROTECTION - HEAD

MSA HELMET - VGUARD

Msa v-gard protective helmet designed in a polyethlene shell, meet or exceed the applicable requirements for a type 1 helmet (top impact) as outlined in ansi z89.1-2003, Class e, and also are certified to in csa 294.1-2005 (Class e).

V-gard helmet with ratchet suspension for all day comform with quick and easy adjustments. Large knob for easy adjustment, comfortable four-point webbed suspension, adjustable dual nylon crown straps, perforated vinyl sweatband wipes clean easily.

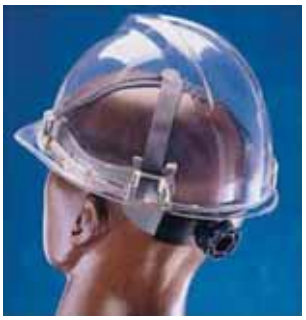

STOCK CODE	BRIEF DESCRIPTION
PPHE-LCL-ZHMT1	MSA V-GARD HELMET C/W RATCHET SUSPENSION

BULLARD, LTX FIREFIGHTER HELMET

- Helmet shell of phenol textile with adjustable plastic interior fittings.

STOCK CODE	BRIEF DESCRIPTION
PPHE-LCL-XHMT3	BULLARD, LTX FIREFIGHTER HELMET C/W NECK PROTECT & 4" FACESHIELD, NFPAT

TEMPEX Safety Helmet

- Protection against high temperatures and splashing metal to EN 397 standard.
- For attaching the face shield to the safety helmet. The face shield can be adjusted to three postions and can be swung over the head. Anti-tilt design. Fits all commercially available helmets.

STOCK CODE	BRIEF DESCRIPTION
PPHE-TPX-HMT01	P/N 1028601 SAFETY HELMET BOP, SIZE: 003

NOAH

For more information or order,
please contact our Sales Team at
Tel: **(65) 6266-0788** or E-mail: **sales@noah.com.sg**

PERSONAL PROTECTION - EAR

SPERIAN
Protection you can trust

SPERIAN SINGLE-USE EARPLUGS

An economical and convenient choice for work situations that demand a high degree of comfort, frequent changes or where hygiene presents a problem for reuse.

BILSOMAT EAR PLUGS (SINGLE-USE)

BILSOMAT 400 FOAM EAR PLUG, 303L

- Wall mounted plastic dispenser provides a user-friendly source for earplugs.
- Durable plastic design
- Twist knob to dispense earplugs.
- Catch basin prevents earplugs from falling to the ground

EARPLUG REFILL

- Conical shape for easy insertion.
- Polyurethane foam plug with smooth outer surface for better hygiene.
- PVC free

STOCK CODE	BRIEF DESCRIPTION
PPHR-BIL-P400	"SPERIAN" 1006202, BILSOMAT 400 FOAM EAR PLUG, 303L, C/W WALL MOUNTED DISPENSER, SNR 29DB
PPHR-BIL-P400.-01	"SPERIAN" 1006186, EARPLUG REFILL, 200 PAIRS/PACK, SNR 29DB

LASER LITE® EAR PLUGS

Highly visible protection

Vibrant colours for high Vibility. Self-adjusting polyurethane foam expands to fit virtually every wearer. Contoured T-shape for easy insertion and fir. Smooth, soil-resistant skin prevents dirt build-up.

STOCK CODE	BRIEF DESCRIPTION
PPHR-HWL-PLL01	SPERIAN LL-1 LASERLITE UNCORDED EARPLUG, 200 PAIRS/BOX, NRR 32DB
PPHR-HWL-PLL30	SPERIAN LL-30 LASERLITE, CORDED EARPLUG,100 PAIRS/BOX, NRR 32DB

MAX LITE® EAR PLUGS

Comfort for smaller ear canals

Ideal for people with smaller ear canals. Low pressure polyurethane foam expands gently for comfortable, long-term wear. Contoured T-shape for easy handling and fit. Smooth, soil-resistant skin prevents dirt build-up.

STOCK CODE	BRIEF DESCRIPTION
PPHR-HWL-PLPF.-30	SPERIAN LPF-30, MAX LITE, CORDED EARPLUG,100 PAIRS/BOX, NRR 32DB

MAX® EAR PLUGS (SINGLE-USE)

Highest NRR in SIngle-use

The world's most-used polyurethane foam earplug. Beil shape for maximym in-ear comfort. Contoured design for easy insertion, resists tendency to back out of the ear canal. Polyurethane foam enhances comfort, especially for long-term wear. Smooth, soil-resistant skin prevents dirt build-up.

STOCK CODE	BRIEF DESCRIPTION
PPHR-HWL-PMX01	SPERIAN MAX 1, UNCORDED EAR PLUG, 200 PAIRS/BOX, NRR 33DB
PPHR-HWL-PMX30	SPERIAN MAX 30, CORDED EAR PLUG, 100 PAIRS/BOX, NRR 33DB

SPERIAN MULTIPLE-USE EARPLUGS

Multiple-Use Earplugs last for weeks, reduce waste and save money. Simply clean with soap and water. Ideal for environments where workers can retain and store earplugs for reuse.

QUIET® EAR PLUGS (MULTIPLE-USE)

Easy Handling, better fit

Patented no-roll design is easy to handle and fit. Contoured shape comfortably matches contours of the ear canal. Smooth, non-irritating skin provides all-day comfort, easy to clean for long-term use. Built-in insertion stem makes insertion quick and easy. Three sizes fine-tunes fit for personal comfort and safety (small, regular, large).

STOCK CODE	BRIEF DESCRIPTION
PPHR-HWL-PQD30	SPERIAN QUIET QD30 EARPLUG CORDED, 100 PAIRS/BOX, NRR 26DB

NOAH

For more information or order,
please contact our Sales Team at
Tel: **(65) 6266-0788** or E-mail: **sales@noah.com.sg**

MACH™ 1 EAR MUFF

Economical protection for shot-term use. Lightweight dielectric construction offers protection at a low price.

FEATURES:
Extremely lightweight construction provides comfort for all-day wear. Dielectric construction suitable for electrical environments.

STOCK CODE	BRIEF DESCRIPTION
PPHR-BIL-MMAC1	SPERIAN BILSOM 1010421, MACH 1 EAR MUFF, NRR 18 DB

Viking™ EAR MUFF

Viking earmuffs give employees the flexibility to wear their earmuffs in three positions, making it easy to use with other PPE. Its robust dielectric construction withstands use an dabuse and provides protection in electrical environments. Features patented Air Flow Control™ technology and snap-in cushions for easy maintenance.

Mutiple-Position
Allows wearer to select position: over-the-head, behind-the-head or under-the head or under-the-chin.

STOCK CODE	BRIEF DESCRIPTION
PPHR-BIL-MV3	SPERIAN BILSOM 1010927 VIKING V3, MULTI-POSITION, NRR 29DB

THUNDER® EAR MUFF

The Thunder series is engineered with all-day comfort in mind. Its dielectric construction withstands use and abuse, while protecting employees in electrical environments. Patented Air Flow Control™ technology provides optimal attenuation across all frequencies and snap-in ear cushions for easy maintenance.

Helmet
Earcups snap in place during use and swing back when not needed. Earcups work with a wide range of populat hard hats. Pair of adapters included.

STOCK CODE	BRIEF DESCRIPTION
PPHR-BIL-MT3H	SPERIAN BILSOM 1011603 THUNDER 3 EARMUFF C/W 3718 ADAPTOR, NRR 27DB

3M HEARING PROTECTION ~ EAR PLUGS RANGE

These comfortable ear plugs offer a tapered shape to fit the ear canal.

STOCK CODE	BRIEF DESCRIPTION
PPHR-MMM-P12DP	3M 1120DP FOAM EAR PLUG C/W DISPENSER & 1000 PAIRS PLUGS (NRR 28DB)
PPHR-MMM-P1100	3M 1100 FOAM EAR PLUG (NRR 29DB), 200 PAIRS/BOX
PPHR-MMM-P1110	3M 1110 CORDED FOAM EAR PLUG (NRR 29DB), 100 PAIRS/BOX
PPHR-MMM-P1292	3M 1292 REUSABLE CORDED EAR PLUG (NRR 25DB), 100 PAIRS/BOX
PPHR-MMM-P1293	3M 1293 REUSABLE CORDED EAR PLUG WITH STORAGE CASE (NRR 25DB), 50 PAIRS/BOX

1120DP

1100

1110

1292

1293

For more information or order,
please contact our Sales Team at
Tel: **(65) 6266-0788** or E-mail: **sales@noah.com.sg**

3M HEARING PROTECTION ~ EAR MUFFS RANGE

E-A-R Model 5000, NRR: 22dB
a) This lightweight general-purpose dielectric earmuff is ideal for daylong use
b) Suitable for most industries in helping to reduce moderate noise levels.
c) The Model 5000 is easily adjusted but retains your chosen position with the innovative twist and lock mechanism.

E-A-R Model 3000, NRR: 26/25 dB
a) Durable, lightweight, non-conductive dielectric plastic.
b) Pivoting earcup connection maintains seal and alignment
c) Replaceable cup liners
d) Soft, foam-filled cushions and large earcup openings provide greater protection and comfort
e) Model 3000 Three position muff can be worn over-the-head, under-the-chin, or behind-the-head

PELTOR H9A OPTIME 98, NRR: 25 dB
a) Peltor H9A headband Ear Muss is one of the most versatile earmuff in industrial today. It deliveres the proper protection needed for a broad range of work areas with increased noise levels.
b) Lightweight 5.1oz
c) Individual stainless spring steel headband wires and two low-tension points for even, comfortable alignment to the head.
d) Designed with ear cushions made of both a liquid and foam filling to provide a secure seal, yet low pressure, around the ear.

PELTOR H7A OPTIME 101, NRR: 27 dB
a) H7A Headband Ear Muffs greatly reduce severe noises to protect workers in just about any environment.
b) Excellent attenuation at low and high frequencies.
c) Designed with ear cushions made of both a liquid and foam filling to provide a secure seal, yet low pressure, around the ear. Padded, stainless steel headband adjusts easily for a universal.
d) Provide maximum comfort for continuous use.

PELTOR H7P3E OPTIME 101, NRR: 24 dB

a) H7P3E Helmet Attachment Ear Muffs greatly reduce severe noises to protect workers in just about any environment .
b) Excellent attenuation at low and high frequencies.
c) Designed with ear cushions made of both a liquid and foam filling to provide a secure seal, yet low pressure, around the ear. Padded, stainless steel headband adjusts easily for a universal.
d) Provide maximum comfort for continuous use.

PELTOR H7P3E-01 DI-ELECTRIC OPTIME 101, NRR: 24 dB

a) H7P3E-01 Di-Electric Helmet Attachment Ear Muffs greatly reduce severe noises to protect workers in just about any environment.
b) Excellent attenuation at low and high frequencies.
c) Designed with ear cushions made of both a liquid and foam filling to provide a secure seal, yet low pressure, around the ear. Padded, stainless steel headband adjusts easily for a universal.
d) Provide maximum comfort for continuous use.

EAR MUFF ONLY

PELTOR H10P3E-01 DI-ELECTRIC OPTIME 105, NRR: 27 dB

a) H10P3E-01 Di-Electric Helmet Attachment Ear Muffs Dual Cup for ultimate protection in the most demanding noise environments.
b) Patented Dual-Cup design
c) The unique “double-shell” earcup design (twin cup connected via a foam inner layer to reduce structural reasonances) to provide the maximum in noise reduction throughout the full range of low and high frequencies.
d) Designed with ear cushions made of both a liquid and foam filling to provide a secure seal, yet low pressure, around the ear. Padded, stainless steel headband adjusts easily for a universal.
e) Attachments for almost all hard hats

STOCK CODE	BRIEF DESCRIPTION
PPHR-MMM-M5000	3M, E-A-R MODEL 5000, 331-5000, HEADBAND EAR MUFF
PPHR-MMM-M3000	3M, E-A-R- MODEL 3000, 330-3002, DI-ELECTRIC, 3-POSITION HEADBAND EAR MUFF
PPHR-MMM-MH9A	3M, PELTOR, OPTIME98, H9A, HEADBAND EAR MUFF
PPHR-MMM-MH7A	3M, PELTOR, OPTIME 101, H7A, HEADBAND EAR MUFF
PPHR-MMM-MH7P	3M, PELTOR, OPTIME 101, H7P3E, HELMET ATTACHMENT EAR MUFF
PPHR-MMM-MH7P.-A	3M, PELTOR, OPTIME 101, H7P3E-01, DI-ELECTRIC HELMET ATTACHMENT EAR MUFF
PPHR-MMM-MH10P-A	3M, PELTOR, OPTIME 105, H10P3E-01, DUAL CUP DI-ELECTRIC HELMET ATTACHMENT EAR MUFF

For more information or order,
please contact our Sales Team at
Tel: **(65) 6266-0788** or E-mail: **sales@noah.com.sg**

3M MAINTENANCE-FREE RESPIRATOR

STOCK CODE	BRIEF DESCRIPTION
RESF-MMM-A0600	3M 0600, ME HYGIENE MASK, 50 PCS/BOX
RESF-MMM-A8110	3M 8110S N95, PARTICULATE RESPIRATOR, SIZE: SMALL, 20 PCS/BOX
RESF-MMM-A8210	3M 8210 N95, PARTICULATE RESPIRATOR, SIZE: REGULAR, 20 PCS/BOX
RESF-MMM-A8212	3M 8212, N95, WELDING RESPIRATOR WITH FACESEAL, 10 PCS/BOX
RESF-MMM-A8214	3M 8214, N95, WELDING RESPIRATOR WITH FACESEAL AND OV RELIEF, 10 PCS/BOX
RESF-MMM-A8233	3M 8233, N100, PARTICULATE RESPIRATOR (HEPA), 1 PC/BAG
RESF-MMM-A8246	3M 8246, R95, PARTICULATE RESPIRATOR. WITH AG RELIEF (ACID) (NONOIL BASE), 20 PCS/BOX
RESF-MMM-A8247	3M 8247, R95, PARTICULATE RESPIRATOR WITH OV RELIEF (ORGANIC GAS) (OIL BASE), 20 PCS/BOX
RESF-MMM-A8271	3M 8271 P95, PARTICULATE RESPIRATOR WITH VALVE, 10 PCS/BOX
RESF-MMM-A8511	3M 8511 N95, PARTICULATE RESPIRATOR WITH VALVE, 10 PCS/BOX
RESF-MMM-A8512	3M 8512 N95, WELDING RESPIRATOR WITH VALVE, 10 PCS/BOX
RESF-MMM-A8514	3M 8514 N95, WELDING RESPIRATOR WITH VALVE AND OV RELIEF, 10 PCS/BOX
RESF-MMM-A8515	3M 8515 N95, WELDING RESPIRATOR WITH VALVE, 10 PCS/BOX
RESF-MMM-A8576	3M 8576 P95, PARTICULATE RESPIRATOR WITH VALVE & AG RELIEF (ACID), 10 PCS/BOX
RESF-MMM-A8577	3M 8577 P95, PARTICULATE RESPIRATOR WITH VALVE & OV RELIEF (OIL PROOF), 10 PCS/BOX
RESF-MMM-A9310	3M 9310 P1, FLATFOLD DUST/MIST RESPIRATOR, 20 PCS/BOX
RESF-MMM-A9312	3M 9312 P1, FLATFOLD DUST/MIST RESPIRATOR WITH VALVE, 10 PCS/BOX
RESF-MMM-A9320	3M 9320 P2, FLATFOLD DUST/MIST RESPIRATOR, 20 PCS/BOX
RESF-MMM-A9322	3M 9322 P2, FLATFOLD DUST/MIST RESPIRATOR WITH VALVE, 10 PCS/BOX
RESF-MMM-A9332	3M 9332 P3, FLATFOLD DUST/MIST/METAL FUME RESPIRATOR WITH VALVE, 10 PCS/BOX

0600

8110

8210

8212

8214

8233

8246

8247

8271

8511

8512

8514

8515

8576

8577

9310

9312

9320

9322

9332

NOAH

For more information or order,
please contact our Sales Team at
Tel: **(65) 6266-0788** or E-mail: **sales@noah.com.sg**

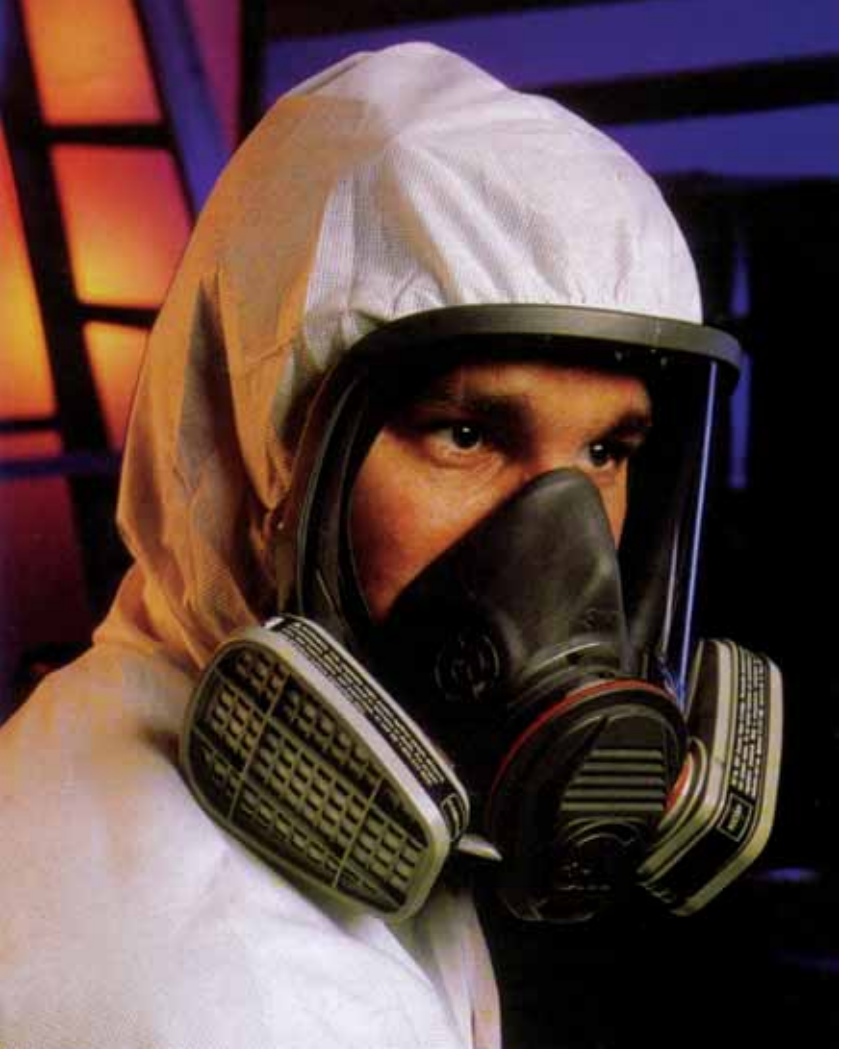

3M ELASTOMERIC FACEPIECE RESPIRATOR

STOCK CODE	BRIEF DESCRIPTION
RESF-MMM-A6100	3M 6100 RESPIRATOR HALF FACEPIECE, SIZE: SMALL
RESF-MMM-A6200	3M 6200 RESPIRATOR HALF FACEPIECE, SIZE: MEDIUM
RESF-MMM-A6300	3M 6300 RESPIRATOR HALF FACEPIECE, SIZE: LARGE
RESF-MMM-A6700	3M 6700 RESPIRATOR FULL FACEPIECE, SIZE: SMALL
RESF-MMM-A6800	3M 6800 RESPIRATOR FULL FACEPIECE, SIZE: MEDIU
RESF-MMM-A6900	3M 6900 RESPIRATOR FULL FACEPIECE, SIZE: LARGE
RESF-MMM-A7501	3M 7501 RESPIRATOR HALF FACEPIECE, SILICON, SIZE: SMALL
RESF-MMM-A7502	3M 7502 RESPIRATOR HALF FACEPIECE, SILICON, SIZE: MEDIUM
RESF-MMM-A7503	3M 7503 RESPIRATOR HALF FACEPIECE, SILICON, SIZE: LARGE
RESF-MMM-A7800-S	3M 7800S RESPIRATOR FULL FACEPIECE, SILICON, SIZE: SMALL
RESF-MMM-A7800	3M 7800S RESPIRATOR FULL FACEPIECE, SILICON, SIZE: MEDIUM
RESF-MMM-A7800-L	3M 7800S RESPIRATOR FULL FACEPIECE, SILICON, SIZE: LARGE

6000 HALF FACE MASK

6000 FULL FACE MASK

7000 HALF FACE MASK

7000 FULL FACE MASK

3M FILTERS AND CARTRIDGES

STOCK CODE	BRIEF DESCRIPTION
RESF-MMM-B2091	3M 2091, P100, PARTICULATE FILTERS
RESF-MMM-B2097	3M 2097, P100, PARTICULATE FILTERS WITH OV RELIEF
RESF-MMM-B6001	3M 6001, ORGANIC VAPOUR CARTRIDGE
RESF-MMM-B6002	3M 6002, ACID GAS CARTRIDGE
RESF-MMM-B6003	3M 6003, ORGANIC VAPOUR/ ACID GAS CARTRIDGE
RESF-MMM-B6004	3M 6004, AMMONIA METHYLAMINE CARTRIDGE
RESF-MMM-B6005	3M 6005, FORMALDEHYDE/ OV CARTIRDGE
RESF-MMM-B6006	3M 6006, MULTI GAS/ VAPOUR CARTRIDGE
RESF-MMM-B6009	3M 6009, MERCURY VAPOUR/ CHLORINE CARTRIDGE
RESF-MMM-B7093	3M 7093, P100, HEPA FILTERS

2091

2097

6001

6002

6003

6004

6005

6006

6009

7093

For more information or order,
please contact our Sales Team at
Tel: **(65) 6266-0788** or E-mail: **sales@noah.com.sg**

3M™ PERSONAL AIR MONITORING SYSTEM

Simple and effective devices that collect certain airborne contaminants using the scientific principle of diffusion.

They meet or exceed 25% accuracy at a 95% confidence level for many workplace contaminants.

3500 Organic Vapor Monitor

Single charcoal of organic vapors. Analysis by gas chromatography. Sampling and analysis guide for over 125 vapors available. 18-months self-life.
3500 - Monitor only.
3510 - Includes 3M analysis for up to 3 compounds per monitor, selected from a list of more than 80 vapors.

STOCK CODE	BRIEF DESCRIPTION
RESF-MMM-Z3500	3M 3500 ORGANIC VAPOR (OV) MONITOR
RESF-MMM-Z3510	3M 3510 ORGANIC V APOR (OV) MONITOR INCLUDES ANALYSIS

3520 Organic Vapor Monitor with Back-Up Section

Primary and back-up sorbent pads for sampling demanding environments. Especially suited for monitoring compounds like vinyl chloride, acrylonitrile, butadiene and methylene chloride for which activated carbon shows limited capacity. 18-months shelf-life.
3520 - Monitor only.
3530 - Includes 3M analysis for up to 3 compounds per monitor.

STOCK CODE	BRIEF DESCRIPTION
RESF-MMM-Z3520	3M 3520 ORGANIC VAPOR (OV) MONITOR WITH BACKUP SECTION
RESF-MMM-Z3530	3M 3530 ORGANIC VAPOR (OV) MONITOR WITH BACKUP SECTION INCLUDES ANALYSIS

3550 Ethylene Oxide Monitor

Designed for sampling personnel or work areas in the pharmaceutical, health care and chemical industries. Analysis procedure is available on request. 18-months shelf-life.
3550 - Includes 3M analysis
3551 - Monitor only.

STOCK CODE	BRIEF DESCRIPTION
RESF-MMM-Z3550	3M 3550 ETHYLENE OXIDE (ETO) MONITOR INCLUDES ANALYSIS
RESF-MMM-Z3551	3M 3551 ETHYLENE OXIDE (ETO) MONITOR

3720 Formaldehyde Monitor

Monitors personnel or work areas in health care, laboratories, and in the chemical, pulp/paper, foundry and textile industries. Analysis procedure is available on request. Not acceptable for STEL monitoring. 18-months shelf-life.
3720 - Includes 3M analysis
3721 - Monitor only.

STOCK CODE	BRIEF DESCRIPTION
RESF-MMM-Z3720	3M 3720 FORMALDEHYDE MONITOR INCLUDES ANALYSIS
RESF-MMM-Z3721	3M 3721 FORMALDEHYDE MONITOR

NOAH

For more information or order,
please contact our Sales Team at
Tel: **(65) 6266-0788** or E-mail: **sales@noah.com.sg**

501

502

5N11

3M PREFILTERS AND RETAINERS

5P71

STOCK CODE	BRIEF DESCRIPTION
RESF-MMM-BX501	3M 501, PREFILTER RETAINER (USE TOGETHER W/ 5N11 OR 5P71)
RESF-MMM-BX502	3M 502, PREFILTER ADAPTOR (USE TOGETHER W/7093, 2091 OR 2097)
RESF-MMM-B5N11	3M 5N11, N95 PARTICULATE FILTER
RESF-MMM-B5P71	3M 5P71, P95 PARTICULATE FILTER

3M FILTER & RESPIRATORY ACCESSORIES

STOCK CODE	BRIEF DESCRIPTION
RESF-MMM-AX504	3M 504, ALCOHOL-FREE RESPIRATOR CLEANING WIPE
RESF-MMM-DX105 105	3M 105, RESPIRATOR WIPE

105

504

SPERIAN
Protection you can trust

SPERIAN FENZY BIOMASK P/N 1814506

Face piece and inner half-mask made of high quality black neoprene with a panoramic visor compatible with all kinds of dust and gas filters with a EN 148-1 and DIN 3182 standards. Anti-chlorine and anti-scratch coatings lens, copolymer half rims and speech diaphragm with membrane in Kapton to improve quality of voice communication over the phone or radio.

STOCK CODE	BRIEF DESCRIPTION
RESF-FZ1-FFMN1	"SPERIAN" 1814506, FENZY BIOMASK, FILTERING TYPE, NEOPRENE

SPERIAN OPTIFIT MASK P/N 1715011

Comfortable wear and wide field of vision for long duration works. Soft skirt in silicone with ergonomic design for optimal fitting. Wide field of vision thanks to panoramic screen. Easy to assembly and dismantle for easy cleaning and maintenance. RD40 connection, EN 136 : 1998

STOCK CODE	BRIEF DESCRIPTION
RESF-FZ1-FFMN2	"SPERIAN" 1715011, FENZY OPTIFIT, FILTERING TYPE, BLACK

NOAH
For more information or order,
please contact our Sales Team at
Tel: **(65) 6266-0788** or E-mail: **sales@noah.com.sg**

SPERIAN CARTRIDGES

STOCK CODE	BRIEF DESCRIPTION
RESF-FZ1-FFMXP-01	“SPERIAN” 1786000, TYPE P3, 250CC CARTRIDGES
RESF-FZ1-FFMXP-02	“SPERIAN” 1788075, TYPE A2B2, 250CC CARTRIDGES
RESF-FZ1-FFMXP-03	“SPERIAN” 1788150, TYPE A2B2E2K2, 450CC CARTRIDGES
RESF-FZ1-FFMXP-04	“SPERIAN” 1788155, TYPE A2B2E2K2P3, 450CC CARTRIDGES

Colour Code	
A	Inorganic vapours, solvents and hydrocarbons
AX	Organic volatile gas vapours - Boiling point below 65°C
B	Inorganic gases and vapours, e.g. chlorine, hydrogen sulphide, hydrocyanic acid
E	Acid gases – sulphur anhydride
K	Organic amine compounds - Ammonia
P	Particulates, solid and liquid aerosols

SPERIAN FERNEZ HALF-MASK

The Fernez 7000 series of half-mask with filters
This is an inexpensive solution for excellent protection of the respiratory tract. These masks with replaceable filters, can be worn several times, which makes them immediately economical compared to the disposable masks that require replacement after every use. The half-masks of the Fernez 7000 series are produced in a thermoplastic elastomer material able to resist many uses, while offering flexibility comparable to that of silicone. Inspiratory headloss is low. For highly appreciable comfort. The filters are placed towards the back for an excellent field of vision. The nasal piece enables further adjustment and makes wearing eyeglasses easier. A small “anti-perspiration” office situated inside the half-mask controls perspiration and this avoids any discomfort due to its retention at the back of the mask. Quick removal is ensured by the mask’s quick-slide fastening system.

The Fernez No 15 DIN half mask with single filter
For long duration work the Fernez No 15 DIN half mask is the answer for comfort. Light in weight, with an optimal field of vision, the Fernez respirator can be fitted with all filters which are used for full faces masks. The robust respirator, made of EPDM, the easy adjustable head strap makes the Fernez respirator outstanding. It can be used with all types of corrective or protective goggles thanks to its anatomic design.

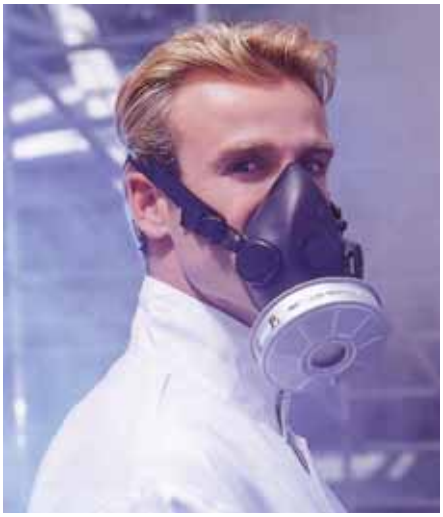

STOCK CODE	BRIEF DESCRIPTION
RESF-FZ1-FHM1B	“SPERIAN” 1765500, FERNEZ 7000 SERIES HALF MASK, SIZE: MEDIUM
RESF-FZ1-FHM1C	“SPERIAN” 1765502, FERNEZ 7000 SERIES HALF MASK, SIZE: LARGE
RESF-FZ1-FHF2	“SPERIAN” 1726592, FERNEZ HALF MASK NO 15 DIN

SPERIAN FERNEZ FILTERS

STOCK CODE	BRIEF DESCRIPTION
RESF-FZ1-FHMX.-01	"SPERIAN" 1765600, FERNEZ TYPE P3 FILTERS
RESF-FZ1-FHMX.-02	"SPERIAN" 1765601, FERNEZ TYPE A2 FILTERS
RESF-FZ1-FHMX.-03	"SPERIAN" 1765615, FERNEZ TYPE A1B1P2 FILTERS
RESF-FZ1-FHMX.-04	"SPERIAN" 1765623, FERNEZ TYPE A1B1E1 FILTERS
RESF-FZ1-FHMX.-05	"SPERIAN" 1765605, FERNEZ TYPE A1B1E1K1P2SL FILTERS

NOAH

For more information or order,
please contact our Sales Team at
Tel: **(65) 6266-0788** or E-mail: **sales@noah.com.sg**

DURAM MASK
PERSONAL ESCAPE MASK

COGO SMOKE ESCAPE MASK

A personal respiratory protective device with visor, hood and built-in filter for escape from fire. Protects against smoke and CO (Carbon Monoxide) inhalation. Complies with European Standard EN-403.

TECHNICAL FEATURES

- Easy to use. Done within seconds. No adjustment straps.
- One size fits all.
- Strong, fire-resistant, elastic rubber hood, protects the entire head and seals comfortably atthe neck.
- Large visor, made of flame retardant transparent film, allows a wide field of view.
- A unique breathing device (patent pending), enables rapid exhalation and improves the physiological conditions for the user, preventing built-up of heat or vapor inside the mask.
- A filtration unit containing low pressure electrostatic particle filter, impregnated charcoal cloth layers to absorb toxic gases and catalyst for Carbon Monoxide Oxidation.

STOCK CODE	BRIEF DESCRIPTION
RESF-DUR-COGO	DURAM, COGO DM-CO-01-YE, SMOKE HOOD, EN403

TECHNICAL DATA

Hood:

- Special Polychloroprene Latex Compound.
- Elongation at break: > 700%
- Tensile strength: > 150 kg/cm^2
- Temperature resistance: 200°C
- Fire resistance as per the requirements of NFPA 701.

Visor:

ETFE film – Copolymer of Polytetrafluroethylene + Ethylene monomer.

- Tensile strength: 50N/mm^2
- Elongation at break: 450%
- Tear resistance: 500 N/mm
- Temperature resistance: 150°C
- Flame retardancy : UL 94 V-0
- Light transmission: > 95%

Breathing Device:

A device combining two valves for exhalation and inhalation + a soft mouthpiece, all in one unit.

Filter Assembly:

Two canisters containing:

- Electrostatic particle filter.
- Layers of impregnated activated charcoal cloth.
- Catalyst.
- Desiccant.

FILTER PERFORMANCE

Test Gas	Challenge Concentration (ml/m^3)	Flow Rate (lit/min)	Break-through Criteria (EN 403)	Break-through Time
Propenal (Acrolein)	100	30	> 15 min (at 0.5 ml/m^3)	20 min
Hydrogen Chloride (HCl	1000	30	> 15 min (at 5 ml/m^3)	> 15 min
Hydrogen Cyanide (HCN)	400	30	> 15 min (at 10 ml/m^3)	> 15 min
Carbon Monoxide (CO)	10,000	30	Total amount of CO penetrated during 15 min < 200 ml	33ml during 15 min

Test	Requirement (EN 403)	Test results
Particle filter penetration	< 6%	< 1.3%
Inhalation resistance	< 8 mbar	3.6 mbar
Exhalation resistance	< 3 mbar	1.1 mbar
CO_2 content of inhalation air	< 2.0%	< 1.9%
Protection factor	> 50	> 50

NOAH

For more information or order,
please contact our Sales Team at
Tel: **(65) 6266-0788** or E-mail: **sales@noah.com.sg**

THE WORLD'S SAFEST, MOST AFFORDABLE FLASHLIGHTS

BRIGHT STAR
The first name in flashlights.℠

When it comes to ATEX approvals and UL listings, Bright Star® flashlights light the way.

Whatever your safety, function and affordability needs may be, Bright Star has a flashlight to meet them. We offer the most affordable lights across all safety rating levels in the shipping industry, worldwide. From our UL or ATEX Approved Responder® Series to our UL-Listed WorkSAFE® line and now our **new** worksafe intrinsic LED series, Bright Star flashlights offer unparalleled safety in potentially explosive or hazardous environments.

Visit us at www.flashlight.com for a complete listing of our distributors.

ATEX CE UL

NEW!

WORKSAFE INTRISIC LED SERIES
RAZOR ULTRA BRIGHT LED and PEN LIGHT
UL & ATEX Certified

Visit www.flashlight.com for our full series of Safety Rated LED Lights

WorkSAFE® 3 D Flashlight

WorkSAFE® 2 D ATEX International Safety Flashlight

WorkSAFE® 2 D Flashlight

RESPONDER® Series

Responder® with Ni-Cad Battery Pack & QuickCharger II

RESPONDER® Series 2 C-Cell Submersible Flashlight

RESPONDER® Series Submersible Pocketlight

INDUSTRIAL SAFETY

Bright Star Lighting Products • 380 Stewart Road • Hanover Township, PA 18706 • 570.825.1900 • FAX 570.825.7108

CONFINED SPACE RESCUE

VENTILATION

GAS DETECTION

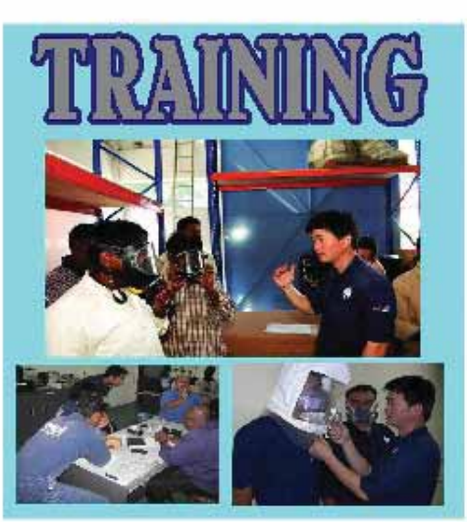

NOAH
AGENCIES 'N' MARINE SERVICES PTE LTD
Main Line: 6266-0788 Fax: 6266-1042
E-mail: sales@noah.com.sg www.noah.com.sg

INDUSTRIAL SAFETY

INDUSTRIAL SAFETY

Our specialist from the Industrial Division provide 100% Safety - from DETECTION to PROTECTION.

Our quality products help you to comply to the current Code of Pratices, Singapore Standards and Workplace Safety and Health (WSH) Act.

From gas detectors to chemical suits, from respiratory protection to fall protection, we provide you the head-to-toe protection that you and your employees require.

With absorbents, breathing apparatus and protective apparel we help you to mitigate and be prepared for all HAZMAT situations.

We are your ONE-STOP provider for your confined space entry, industrial safety and emergency response needs.

CONTENTS

PRODUCT CODE	PRODUCTS	PAGE
CLCH	CLOTHING, CHEMICAL	244
EWSH	EYEWASH STATION	250
FALL	FALL PROTECTION	262
FFEQ	FIRE FIGHTING EQUIPMENT REFER TO FIRE FIGHTING EQUIPMENT	182
GDTR	GAS DETECTOR & ACCESSORIES	268
HCNZ	HOSE, COUPLING, NOZZLES REFER TO FIRE FIGHTING EQUIPMENT	183
JINF	JACKET, INFLATABLE REFER TO MARINE SAFETY	34
LPHL	LIGHT, PORTABLE HANDHELD REFER TO FIRE FIGHTING EQUIPMENT	50
PPHE	SAFETY HELMETS REFER TO FIRE FIGHTING EQUIPMENT	184
RESA	RESPIRATORY - AIR REFER TO FIRE FIGHTING EQUIPMENT	185
RESF	RESPIRATORY - FILTERING REFER TO PERSONAL PROTECTIVE EQUIPMENT	227
SORB	SORBENT	280
VENT	VENTILATORS	284

CLOTHING CHEMICAL

All Lakeland coveralls (with the exception of Zonegard) are classed as Category III "Complex" products as they are designed to protect the wearer from chemical hazards. In the case of clothing designed to protect against chemicals, six "Types" of protection have been identified with standards written for each as follows

EN Type		Type Description	EN Symbol	Lakeland Products
Type 1	EN943-1 EN943-2	**Gas Tight Protective Clothing.** Protective clothing against liquid and gaseous chemicals, aerosols and solid particulates		NA
Type 2	EN943-1	**Non Gas Tight Protective Clothing.** Suits which retain positive pressure to prevent ingress of dusts, liquids and vapours		NA
Type 3	EN14605	**Liquid Tight Suits** Suits which can protect against strong and directional jets of liquid chemical		Pyrolon CRFR,Tomtex ChemMAX1,ChemMax2 ChemMAX3
Type 4	EN14605	**Spray Tight Suits** Suits which offer protection against saturation of liquid chemicals		MicroMAX TS,Pyrolon CRFR ChemMAX1,ChemMAX2 ChemMAX3
Type 5	EN ISO 13982-1 (&2)	**Dry Particle Suits** Suits which provide protection to the full body against airborne solid particulates		SafeGard76 MicroMAX Series
Type 6	EN13034	**Reduced Spray Suits** Suits which offer limited protection against a light spray of liquid chemicals		SafeGard76,MicroMAX NS MicroMAX NS CoolSuit MicroMAX,Pyrolon XT

ANSI SIZES

Recommended sizing Chart for Limited-Use and Disposable Coveralls

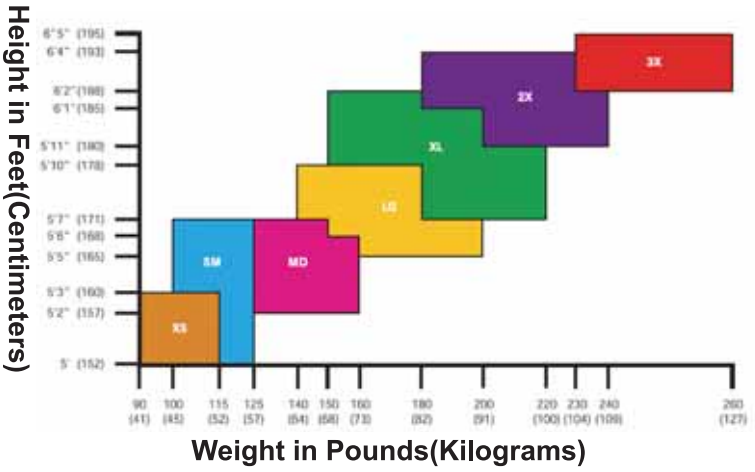

For more information or order,
please contact our Sales Team at
Tel: **(65) 6266-0788** or E-mail: **sales@noah.com.sg**

Lakeland MicroMAX NS · AMN428E

Coveralls made from high quality microporous film laminate offers excellent liquid and dust protection in a soft and flexible fabric with good moisture vapour transmission properties.

Key Applications
- Protection against light splashes of low hazard liquids and hazardous dry particles.
- Paint spraying (non-linting surface)
- Clean room (may require additional cleaning)
- General cleaning and maintenance applications
- Asbestos removal and handling
- Food processing applications
- Protection against oils and resins
- Pharmaceutical processing and manufacture
- Electronic assembly (non-linting and anti-static)

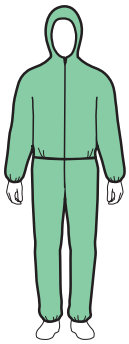

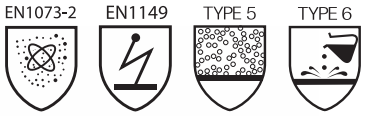

MicroMAX NS

Microporous PE film + Spunbound PP (63g/sqm)

STOCK CODE	BRIEF DESCRIPTION
CLCH-LKL-428E-B	LAKELAND, AMN428E - COVERALL, ZIPPER, ATTACHED HOOD, ELASTIC WRIST AND ANKLE, WITH ZIP FLAP - EUROPEAN SIZE AND CE MARKS (TYPE 5 & 6) **SIZE: MEDIUM**
CLCH-LKL-428E-C	LAKELAND, AMN428E - COVERALL, ZIPPER, ATTACHED HOOD, ELASTIC WRIST AND ANKLE, WITH ZIP FLAP - EUROPEAN SIZE AND CE MARKS (TYPE 5 & 6) **SIZE: LARGE**
CLCH-LKL-428E-D	LAKELAND, AMN428E - COVERALL, ZIPPER, ATTACHED HOOD, ELASTIC WRIST AND ANKLE, WITH ZIP FLAP - EUROPEAN SIZE AND CE MARKS (TYPE 5 & 6) **SIZE: EXTRA LARGE**

Lakeland MicroMAX NS · AMNC428E

MicroMAX NS Cool Suit

EN1073-2 EN1149 TYPE 5 TYPE 6

MicroMAX NS Cool Suit is a Type 5 & 6 single use protective coverall that offers the best of protection with a high level of comfort derived from breathability. The back of the coverall features a large panel of highly breathable Safegard 76 material - in blue for easy identification. This enables the suit to breath easily, making the MicroMAX NS Cool Suit comfortable in the warmest of working environments.

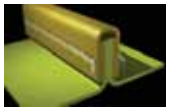

MicroMAX NS Cool Suit is constructed using blue bound seams for superior strength properties and improved particle and liquid repellancy at the seams.

STOCK CODE	BRIEF DESCRIPTION
CLCH-LKL-C428E-B	LAKELAND, AMNC428E, COOL SUIT - COVERALL, ZIPPER, ATTACHED HOOD, ELASTIC WRIST AND ANKLE, WITH ZIP FLAP - EU SIZE AND CE MARKS (TYPE 5 & 6) - BOUND SEAM **SIZE: MEDIUM (25 PCS/CASE)**
CLCH-LKL-C428E-C	LAKELAND, AMNC428E, COOL SUIT - COVERALL, ZIPPER, ATTACHED HOOD, ELASTIC WRIST AND ANKLE, WITH ZIP FLAP - EU SIZE AND CE MARKS (TYPE 5 & 6) - BOUND SEAM **SIZE: LARGE (25 PCS/CASE)**
CLCH-LKL-C428E-D	LAKELAND, AMNC428E, COOL SUIT - COVERALL, ZIPPER, ATTACHED HOOD, ELASTIC WRIST AND ANKLE, WITH ZIP FLAP - EU SIZE AND CE MARKS (TYPE 5 & 6) - BOUND SEAM **SIZE: EXTRA LARGE (25 PCS/CASE)**

NOAH

For more information or order,
please contact our Sales Team at
Tel: **(65) 6266-0788** or E-mail: **sales@noah.com.sg**

Lakeland ChemMAX 3 · CT3S428E

Limited use coverall made using multi-layer composite technology featuring a proprietary barrier film laminated SBPP to enable an effective high barrier to a wide range of hazardous chemicals.

Features:
• EVOH barrier film provides the ultimate chemical barrier film in disposable materials
• Constructed with stitched and taped seams for superior protection and strength
• Design features for double zip / storm flap front fastening for improved protection and quick and easy donning and removal.
• Despite the high chemical barrier, ChemMAX3 material is suprisingly soft, flexible and light
• Reinforced knee-pads for comfort and durability
• Grey color for easy identification

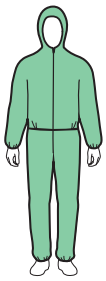

STOCK CODE	BRIEF DESCRIPTION
CLCH-LKL-ACT3S-B	LAKELAND, CT3S428E COVERALL, DOUBLE ZIPPER, ATTACHED HOOD, ELASTIC WAIST, WRIST AND ANKLE, CE MARKED (TYPE 3 & 4), TAPE SEALED **SIZE: MEDIUM**
CLCH-LKL-ACT3S-C	LAKELAND, CT3S428E COVERALL, DOUBLE ZIPPER, ATTACHED HOOD, ELASTIC WAIST, WRIST AND ANKLE, CE MARKED (TYPE 3 & 4), TAPE SEALED **SIZE: LARGE**
CLCH-LKL-ACT3S-D	LAKELAND, CT3S428E COVERALL, DOUBLE ZIPPER, ATTACHED HOOD, ELASTIC WAIST, WRIST AND ANKLE, CE MARKED (TYPE 3 & 4), TAPE SEALED **SIZE: X-LARGE**

LAKELAND FULLY ENCAPSULATED SUIT (LEVEL A) TK640 (FRONT ENTRY)

Tychem® TK fully encapsulated, vapor-protective suit (Level A), expanded back, sealed seams inside and out, 48'' zipper, double storm flap with Velcro®, 2 layer faceshield (10 mil Teflon®/40mil PVC), 3 layer glove combination of Butyl®, North® Silvershield® and outer knit Kevlar®, 2 Pirelli® valves, attached sock boots with boot flaps, 1.5'' waist belt with 3 belt loops sewn (inside) and sealed. Storage bag included. This garment offers Level A protection.

Sizes: S - 5X
Case Pack 1

STOCK CODE	BRIEF DESCRIPTION
CLCH-LKL-TK640-A	LAKELAND" DUPONT TYCHEM TK640, CHEMICAL SUIT, SIZE: SMALL
CLCH-LKL-TK640-B	LAKELAND" DUPONT TYCHEM TK640, CHEMICAL SUIT, SIZE: MEDIUM
CLCH-LKL-TK640-C	LAKELAND" DUPONT TYCHEM TK640, CHEMICAL SUIT, SIZE: LARGE
CLCH-LKL-TK640-D	LAKELAND" DUPONT TYCHEM TK640, CHEMICAL SUIT, SIZE: X-LARGE

LAKELAND TESTKIT

Lakeland testkit consist of 1 x magnehelic gauge on bracket,
1 x brass cross with air supply control valve, relief valve & male air supply nipple,
1 x short tubing w/male fitings at both ends,
1 x long tubing w/female quick connect fitings,
1 x twist lock fittings with quick connect fittings,
1 x countdown alarm timer and 1 x black storage case

STOCK CODE	BRIEF DESCRIPTION
CLCH-LKL-XTEST	LAKELAND PN 00010 TESTKIT FOR LEVEL 'A' SUIT CONSIST

NOAH

For more information or order,
please contact our Sales Team at
Tel: **(65) 6266-0788** or E-mail: **sales@noah.com.sg**

Permeation data for ASTM recommended list of chemicals for evaluating protective clothing materials (ASTM F1001)

Chemical Name	Physical Phase	Normalized Breakthrough Time (min.)	Average Permeation Rate (µg/cm²/min)
Acetone	L	>480	<0.01
Acrylonitrile	L	>480	<0.0003
Ammonia Gas	G	>480	<0.1
1, 3-Butadiene	G	>480	<0.07
Carbon disulfide	L	>480	<0.02
Chlorine Gas	G	>480	<0.02
Dichloromethane	L	>480	<0.03
Dimethyllamine	G	>480	<0.05
N, N-Dimethylacetamide	L	>480	<0.006
Ethyl Acetate	L	>480	<0.06
Ethylene Oxide Gas	G	>480	<0.1
n-Hexane	L	>480	<0.01
Hydrogen Chloride	G	>480	<0.1
Methanol	L	>480	<0.1
Methyl chloride	G	>480	<0.02
Nitrobenzene	L	>480	<0.1
Sodium hydroxide, 50%	L	>480	<0.1
Sulfuric acid, 98%	L	>480	<0.1
Tetrachloroethylene	L	>480	<0.01
Tetrohydrofuran	L	>480	<0.04
Toluene	L	>480	<0.02

> = greater than, < = less than

For the latest permeation data, go to the DuPont website at www.dupontprotectiveapprl.com.

For specific permeation data and breakthrough times for other chemicals, contact the DuPont Protective Apparel Fax-On-Demand Service at 1-800-558-9329.

Tychem® TK Physical Properties

Basis Weight (oz/yd²)	10.6 (ASTM D3776)
Thickness (mils)	26 (ASTM D1777)
Ball Burst (lbf)	187 (ASTM D3787)
Grab Tensile (lbf)	188/180 (ASTM D5034)*
Trap Tear (lbf)	53/52 (ASTM D5733)*

* MD/CD

Heat Sealed Seams

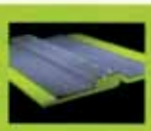

Permeation data for 595 Class/Subclass Chemical Warfare Agents

Agent	Common Name	CAS Number	Protocol	Avg. Breakthrough Time	Minimum Detectable Permeation (µg/cm²)
GA	Tabun	77-80-6	DN5	>12 hrs.	<0.0001
GB	Sarin	107-44-8	DN5	> 12 hrs.	<0.0001
			DN6	>12 hrs.	<0.00024
GD	Soman	99-64-0	DN 5	>12 hrs.	<0.0001
			DN 6	>12 hrs.	<0.0001
HD	Sulfur Mustard	505-60-2	DN3	> 12 hrs.	<0.0001
			DN4	> 12 hrs.	<0.2000
L	Lewisite	541-25-3	DN3	> 12 hrs.	<0.0060
			DN4	> 12 hrs.	<0.2000
VX	VX	50782-69-9	DN5	>12 hrs.	<0.0001
			DN6	>12 hrs.	<0.00024

> = greater than, < = less than

Fabric Test Protocols – All tests performed in triplicate for DuPont Nonwovens by an independant accredited laboratory at 22° C, 50% R.H.

Protocol DN3 – MIL STD-282, Method T-209 (HD) or modified for Lewisite, for 12 hours at 10 g/m².

Protocol DN4 – MIL STD-282, Method T-209 (HD) or modified for Lewisite, for 12 hours at 100 g/m² (Total coverage).

Protocol DN5 – MIL STD-282, Method T-209 (GB) or modified for GA, GD, and VX, for 12 hours at 10 g/m².

Protocol DN5 – MIL STD-282, Method T-209 (GB) or modified for GA, GD, and VX, for 12 hours at 100 g/m² (Total coverage).

Tychem® TK Quick Pic

- >480 minute resistance to ASTM F1001 test battery
- >12 hour resistance to chemical warfare agent
- Highest level of protection amongst all Tychem® fabrics

EYEWASH STATION

AXION™ msr

Introducing AXION MSR™ by Haws, the first and only eyewash and eye/face wash specifically designed to operate in concert with standard healthcare protocols and the natural function of the human eye.

In addition to the AXION MSR medical innovations, this exciting new patent-pending product has a number of features that set it apart from any other eyewash on the market:

- **Inverted eyewash and eye/face wash streams**
  AXION eyewash streams are inverted compared with the traditional eyewash. AXION streams contact the eyes at the inner canthus or corner, adjacent to the bridge of the nose. Contaminants are then swept to the outer edge of the eye, where gravity takes over and runs them into the eyewash bowl.

- **Laminar flow eyewash streams for greater stream consistency**
  Another first is the use of laminar flow engineering in the eyewash streams. In simple terms, a laminar flow is one in which there is an abscence of turbulence, because the stream is "built" in layers. The result? An even, comfortable, predictable stream height and circumference.

- **Zero vertical velocity stream engineering for maximum victim comfort**
  Next, because AXION eyewash streams are almost vertically oriented, they "stall" at a prescribe height. When the stream exhaust its vertical velocity, it softly turns outwards and begins to fall off horizontally. This action causes a slight puddling of the flow in midair before it returns to the eyewash bowl. It occurs directly at the optimal contact point with the eye, making for a more pleasant and effective irrigation experience.

- **Each model is field configurable as either an eyewash or eye/facewash**
  Impregnating these components with silver helps protect the heads against the growth of mold and mildew on the treated components. AXION MSR is the only eyewash product on the market to feature antimicrobial protection.

NOAH

For more information or order,
please contact our Sales Team at
Tel: **(65) 6266-0788** or E-mail: **sales@noah.com.sg**

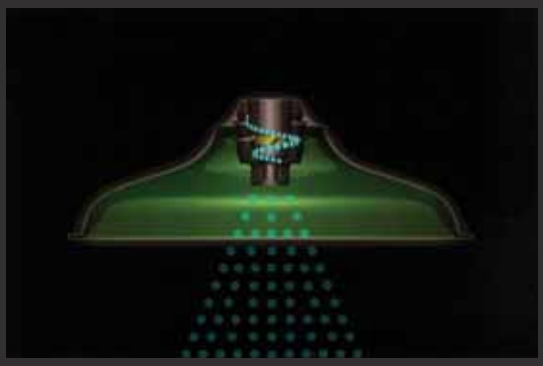

The AXION drench shower nozzle uses the latest hydrodynamic principles to spin inlet water and break it into smaller, discrete droplets.

This spinning and atomization action mitigates strong physical pressures driving water to the outer rim, making distribution equal across entire footprint of the flow.

Better Coverage, Softer Flow ... AXION MSR!

Field Configurable

Specifiers and buyers will appreciate the flexibility built into AXION MSR products. Every model can be field configured as either an eyewash or an eye/face wash by simply changing out the top cover of the head and its flow control. Change-out components are included at no extra charge!

AXION MSR products are available in the most popular configurations: combination showers, as well as wall-mounted and pedestal eyewashes. And, specifiers will be glad to know that the head sets (eyewash or eye/face wash and shower) have been designed to be a simple retro-fit onto most existing Haws installations.

Protection for the Human Eye - The Lacrimal System

The human eye is equipped with an automatic lubricating and cleansing mechanism, called the lacrimal system. It consists of the lacrimal gland, which produces tears, the ducts that channel tears from the lacrimal gland to the ocular surface, and the lacrimal punctum, which are drains that channel excess fluids away from the ocular surface. Importantly, the lacrimal punctum drains excess fluids directly into the nasal cavity. This process is the reason why your nose runs when you cry.

If, for example, a chemical is introduced into the eye, nature's own cleansing mechanism can serve to force the contaminant into the nasal cavity, where it can be breathed into the lungs or swallowed. The ideal approach in chemical or particulate injuries is to sweep contaminants away from the lacrimal punctum!

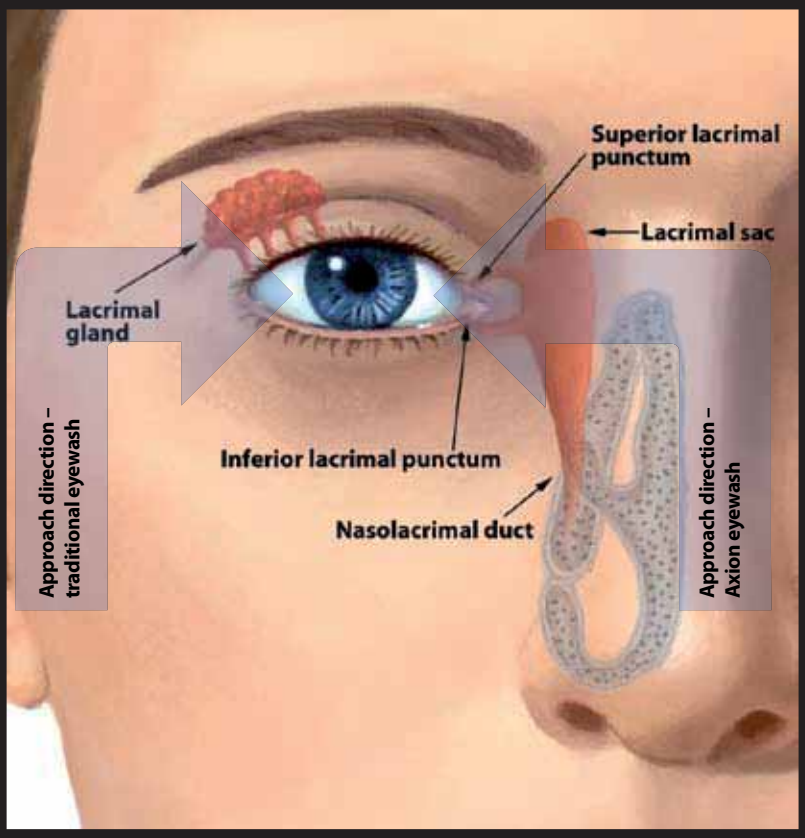

EYE WASH - WALL MOUNTED

MODEL 7260B or 7260B-7270B AXION WALL MOUNTED EYE/FACE WASH

Receptor: Green ABS plastic 11“ round bowl
Eye/Face Wash Head:
Model 7260B: Twin Soft-Flo ABS plastic anti-surge Eyewash heads
Model 7260B-7270B AXION: Revolutionary antimicrobially treated AXION MSR™ Eye/Face wash head
Activation: Rigid stainless steel push flag operates a stay open ball valve that is equipped with a stainless steel ball and stem
Strainer: Fully serviceable in-line 50 x 50 mesh strainer filters debris from reaching the eyewash
Others: Dust cover for eyewash head. Universal emergency sign

- Supply Connection 1/2“ NPT (F)
- Waste Connection 1-1/4“ NPT (F)

STOCK CODE	BRIEF DESCRIPTION
EWSH-HWS-7260B-	HAWS MODEL 7260B WALL MOUNTED EYEWASH C/W 11" ABS PLASTIC BOWL AND BRACKET (HAND OPERATED ONLY)
EWSH-HWS-7260B-AX	HAWS MODEL 7260B-7270B AXION WALL MOUNTED EYEWASH C/W 11" ABS PLASTIC BOWL AND BRACKET (AXION MODEL AND HAND OPERATED ONLY)

MODEL 7360B, 7460B or 7360B-7460B AXION WALL MOUNTED EYE/FACE WASH

Receptor: Stainless Steel 11“ round bowl
Eye/Face Wash Head:
Model 7460B: Twin Soft-Flo ABS plastic anti-surge Eyewash heads
Model 7360B: Twin Feather-flo patented ABS anti surge Eye/Face Wash
Model 7360B AXION: Revolutionary antimicrobially treated AXION MSR™ Eye/Face wash head
Activation: Rigid stainless steel push flag operates a stay open ball valve that is equipped with a stainless steel ball and stem
Strainer: Fully serviceable in-line 50 x 50 mesh strainer filters debris from reaching the eyewash
Others: Dust cover for eyewash head. Universal sign

- Supply Connection 1/2“ NPT (F)
- Waste Connection 1-1/4“ NPT (F)

STOCK CODE	BRIEF DESCRIPTION
EWSH-HWS-7360B- OR EWSH-HWS-7460B-	HAWS MODEL 7360B OR 7460B WALL MOUNTED EYEWASH C/W 11" STAINLESS STEEL BOWL AND BRACKET (HAND OPERATED ONLY)
EWSH-HWS-7360B-AX	HAWS MODEL 7360B-7460B AXION WALL MOUNTED EYEWASH C/W 11" STAINLESS STEEL BOWL AND BRACKET (AXION MODEL AND HAND OPERATED ONLY)

*Other Models available: 7260 BT, 7260 BT AXION, 7360BT, 7460BT, 7360BT AXION, 7778B For Other Models, please contact our sales personnel for more details.

For more information or order,
please contact our Sales Team at
Tel: **(65) 6266-0788** or E-mail: **sales@noah.com.sg**

EYE WASH - FLOOR MOUNTED

MODEL 7261 or 7261-7271 AXION PEDESTAL EYE/FACE WASH

Receptor: Green ABS plastic 11“ round bowl
Eye/Face Wash Head:
Model 7261: Twin Soft-Flo ABS plastic anti-surge Eyewash heads
Model 7261-7271 AXION: Revolutionary antimicrobially treated AXION MSR™ Eye/Face wash head
Activation: Rigid stainless steel push flag operates a stay open ball valve that is equipped with a stainless steel ball and stem
Strainer: Fully serviceable in-line 50 x 50 mesh strainer filters debris from reaching the eyewash
Construction: 1-1/4“ galvanized pipe and fittings along with powder-coated cast-iron 9“ diameter floor flange provide corrosion resistance in a long lasting product.
Others: Dust cover for eyewash head. Universal sign

- Supply Connection 1/2“ NPT (F)
- Waste Connection 1-1/4“ NPT (F)

STOCK CODE	BRIEF DESCRIPTION
EWSH-HWS-7261 -	HAWS MODEL 7261 PEDESTAL MOUNTED WITH FLOOR FLANGE (HAND OPERATED ONLY)
EWSH-HWS-7261 -AX	HAWS MODEL 7261-7271 AXION PEDESTAL MOUNTED WITH FLOOR FLANGE (AXION MODEL AND HAND OPERATED ONLY)

MODEL 7361, 7461 or 7361-7461 AXION PEDESTAL EYE/FACE WASH

Receptor: Stainless Steel 11“ round bowl
Eye/Face Wash Head:
Model 7461: Twin Soft-Flo ABS plastic anti-surge Eyewash heads
Model 7361: Twin Feather-flo patented ABS anti surge Eye/Face Wash
Model 7361-7461 AXION: Revolutionary antimicrobially treated AXION MSR™ Eye/Face wash head
Activation: Rigid stainless steel push flag and model SP220 foot treadle operate a stay open ball valve that is equipped with a stainless steel ball and stem
Strainer: Fully serviceable in-line 50 x 50 mesh strainer filters debris from reaching the eyewash
Construction: 1-1/4“ galvanized steel pipe and fittings along with powder-coated cast-iron 9“ diameter floor flange provide corrosion resistance in a long lasting product.
Others: Dust cover for eyewash head. Universal sign

- Model SP220 Foot Control Assembly (powder-coated aluminum treadle) included for NON AXION model only

- Supply Connection 1/2“ NPT (F)
- Waste Connection 1-1/4“ NPT (F)

STOCK CODE	BRIEF DESCRIPTION
EWSH-HWS-7361- OR EWSH-HWS-7461-	HAWS MODEL 7361 OR 7461 PEDESTAL MOUNTED WITH FLOOR FLANGE (HAND AND FOOT OPERATED)
EWSH-HWS-7361-AX	HAWS MODEL7361-7461 AXION PEDESTAL MOUNTED WITH FLOOR FLANGE (AXION MODEL AND HAND OPERATED ONLY)

Other Model available: 7777 For Other Models, please contact our sales personnel for more details.

DRENCH SHOWER

Model 8100 AXION

Shower Head:
AXION MSR™ ABS plastic drench shower head with integral 20gpm flow control.
Activation:
Rigid stainless steel pull rod operates a stay open ball valve that is equipped with a stainless steel stem
Construction:
1-1/4"" galvanized steel pipe and fittings along with powder-coated cast-iron 9"" diameter floor flange provide corrosion resistance in a long lasting product.
Others:
Universal emergency sign

- Supply Connection 1-1/4"" NPT (F)

STOCK CODE	BRIEF DESCRIPTION
EWSH-HWS-8100-AX	HAWS MODEL 8100 AXION FLOOR MOUNTED DRENCH SHOWER WITH AXION ABS PLASTIC HEAD (HAND OPERATED ONLY)

Model 8122H AXION

Shower Head:
AXION MSR™ ABS plastic drench shower head with integral 20gpm flow control.
Activation:
Rigid stainless steel pull rod operates a stay open ball valve that is equipped with a stainless steel stem
Others:
Universal emergency sign

- Supply Connection 1" NPT (F)

STOCK CODE	BRIEF DESCRIPTION
EWSH-HWS-8122-AX	"HAWS MODEL 8122H AXION HORIZONTAL MOUNTED DRENCH SHOWER (HAND OPERATED ONLY)"

NOAH
For more information or order,
please contact our Sales Team at
Tel: **(65) 6266-0788** or E-mail: **sales@noah.com.sg**

Model 8300 or 8309 or 8300-8309 AXION

Shower Head:
Model 8300 and 8309 : 10“ ABS shower head with 20gpm flow control
Model 8300-8309 AXION : AXION MSR™ ABS plastic drench shower head with integral 20gpm flow control.
Activation: Rigid stainless steel pull rod operates a stay open ball valve that is equipped with a stainless steel stem
Construction: 1-1/4“ galvanized steel pipe and fittings along with powder-coated cast-iron 9“ diameter floor flange provide corrosion resistance in a long lasting product.
Stanchion incorporates an exclusive cast air gap/supply fitting that separates supply and waste. Two 21“ long self adhesive high visibility stripes in Safety Green and bright yellow to improve visibility.

Receptor: Stainless Steel 11“ round bowl
Eye/Face Wash Head:
Model 8300 : Twin Soft-Flo ABS plastic anti-surge Eyewash heads
Model 8309 : Twin Feather-flo patented ABS anti surge Eye/Face Wash
Model 8300-8309 AXION: Revolutionary antimicrobially treated AXION MSR™ Eye/Face wash head
Activation: Rigid stainless steel push flag and model SP220 foot treadle operate a stay open ball valve that is equipped with a stainless steel ball and stem
Strainer: Fully serviceable in-line 50 x 50 mesh strainer filters debris from reaching the eyewash
Others:
Dust cover for eyewash head
Universal emergency sign

- Model SP220 Foot Control Assembly (powder-coated aluminum treadle) included for NON AXION model only

- Supply Connection 1-1/4“ NPT (F)
- Waste Connection 1-1/4“ NPT (F)

STOCK CODE	BRIEF DESCRIPTION
EWSH-HWS-8300 - OR EWSH-HWS-8309 -	HAWS MODEL 8300 AND 8309 FREE STANDING EYEWASH WITH STAINLESS STEEL BOWL AND DRENCH SHOWER WITH ABS PLASTIC HEAD (HAND AND FOOT OPERATED)
EWSH-HWS-8309 -AX	HAWS MODEL 8300-8309 AXION FREE STANDING EYEWASH WITH STAINLESS STEEL BOWL AND DRENCH SHOWER WITH ABS PLASTIC HEAD (AXION MODEL AND HAND OPERATED ONLY)

Model 8320 or 8320 AXION

Shower Head:
Model 8320 : 10“ ABS shower head with 20gpm flow control
Model 8320 AXION : AXION MSR™ ABS plastic drench shower head with integral 20gpm flow control.
Activation:
Rigid stainless steel pull rod operates a stay open ball valve that is equipped with a stainless steel stem
Construction:
1-1/4“ galvanized steel pipe and fittings along with powder-coated cast-iron 9“ diameter floor flange provide corrosion resistance in a long lasting product. Stanchion incorporates an exclusive cast air gap/supply fitting that separates supply and waste. Two 21“ long self adhesive high visibility stripes in Safety Green and bright yellow to improve visibility.

Receptor:
Green ABS plastic 11“ round bowl
Eye/Face Wash Head:
Model 8320 : Twin Soft-Flo ABS plastic anti-surge Eyewash heads
Model 8320 AXION: Revolutionary antimicrobially treated AXION MSR™ Eye/Face wash head
Activation:
Rigid stainless steel push flag operates a stay open ball valve that is equipped with a stainless steel ball and stem
Strainer:
Fully serviceable in-line 50 x 50 mesh strainer filters debris from reaching the eyewash
Others:
Dust cover for eyewash head
Universal emergency sign

- Supply Connection 1-1/4“ NPT (F)
- Waste Connection 1-1/4“ NPT (F)

STOCK CODE	BRIEF DESCRIPTION
EWSH-HWS-8320	HAWS MODEL 8320 FREE STANDING EYEWASH W/ ABS PLASTIC BOWL AND DRENCH SHOWER WITH ABS PLASTIC HEAD (HAND OPERATED ONLY)
EWSH-HWS-8320-AX	HAWS MODEL 8320 AXION FREE STANDING EYEWASH W/ ABS PLASTIC BOWL AND DRENCH SHOWER WITH ABS PLASTIC HEAD (AXION AND HAND OPERATED ONLY)

NOAH
For more information or order,
please contact our Sales Team at
Tel: **(65) 6266-0788** or E-mail: **sales@noah.com.sg**

MODEL 8330

Shower Head:
10“ stainless steel shower head with 20gpm flow control
Activation:
Rigid stainless steel pull rod operates a stay open ball valve that is equipped with a stainless steel stem
Construction:
9“ diameter floor flange with 1-1/4““ stainless steel piping.
Stanchion incorporates an exclusive cast air gap/supply fitting that separates supply and waste. Two 21““ long self adhesive high visibility stripes in Safety Green and bright yellow to improve visibility.

Receptor:
Stainless Steel 11“ round bowl
Eye/Face Wash Head:
Twin soft-flo anti-surge stainless steel eyewash head cum circular spray ring to bathe entire facial area. Flow rate: min 4gpm@30psi
Activation:
Rigid stainless steel push flag and foot treadle operates a stay open ball valve that is equipped with a stainless steel ball and stem
Strainer:
Fully serviceable in-line 50 x 50 mesh strainer filters debris from reaching the eyewash
Others:
Dust cover for eyewash head
Universal emergency sign

- Supply Connection 1-1/4“ NPT (F)
- Waste Connection 1-1/4“ NPT (F)

STOCK CODE	BRIEF DESCRIPTION
EWSH-HWS-8330 -	HAWS MODEL 8330 FREE STANDING EYEWASH W/ STAINLESS STEEL BOWL AND DRENCH SHOWER ALL STAINLESS STEEL HEAD (HAND AND FOOT OPERATED)

HAWS · PORTABLE EYE WASH 7500

Haws portable Model 7500 is ideal for remote locations. Using gravity to supply a continuous flow of clean water to injured personnel for a full 15 minutes at .4gpm, this model is a reliable source for safety. Recognizing the 7500's full patterned flushing feature, those working in remote areas can't help but feel confident with this piece of emergency equipment day after day.

- Featuring a FDA approved high-density green polyethylene tank easily activated by pulling the yellow activation arm down to the open position.
- Supplied with one bottle of bacteriostatic additive.
- Bacteriostatic additive allows for the storage of water for up to six months, making for a more easily maintained piece of emergency equipment.
- A wide-fill opening with threaded cap permits easy inspection, cleaning and filling.
- Relocation is simple due to the easily mounted (bracket included) and light design of this 16 gallon portable.
- Measurements: 22-1/2" high, 21-1/2" wide, 19-1/2" deep.

STOCK CODE	BRIEF DESCRIPTION
EWSH-HWS-7500	HAWS, 7500 16 GAL (OVER 15 MINS) PORTABLE EYEWASH C/W 1 BOTTLE PRESERVATIVE ADDITIVE

HAWS · PORTABLE EYE WASH 7501

Compact portable Model 7501 is ideal for remote locations. Using gravity to supply a continuous flow of clean water to injured personnel for a full 15 minutes at .4gpm, this model is a reliable source for safety. Recognizing the 7501's full patterned flushing feature, those working in remote areas can't help but feel confident with this piece of emergency equipment day after day.

- Featuring a FDA approved high-density green polyethylene tank easily activated by pulling the yellow activation arm down to the open position.
- Supplied with one bottle of bacteriostatic additive.
- Bacteriostatic additive allows for the storage of water for up to six months, making for a more easily maintained piece of emergency equipment.
- A wide-fill opening with threaded cap permits easy inspection, cleaning and filling.
- Relocation is simple due to the easily mounted bracket (included) and light design of this 9 gallon portable.
- Measurements: 14-1/2" high, 22" wide, 10-1/8" deep.*Note: Unit must be wall hung.

STOCK CODE	BRIEF DESCRIPTION
EWSH-HWS-7501	HAWS, 7501 9 GAL (OVER 15 MINS) PORTABLE EYEWASH C/W 1 BOTTLE PRESERVATIVE ADDITIVE

NOAH

For more information or order,
please contact our Sales Team at
Tel: **(65) 6266-0788** or E-mail: **sales@noah.com.sg**

HAWS · BACTERIOSTATIC PRESERVATIVE 9082

Model 9082 bacteriostatic water preservative additive for use in portable eyewash stations. This preservative is to be used only with clean potable water. When used as directed, one 8 oz. bottle will preserve 6 to 20 gallons of potable water for up to six months. Shelf life is up to two years.

STOCK CODE	BRIEF DESCRIPTION
EWSH-HWS-9082	HAWS, 9082 PRESERVATIVES (1 BOTTLE) - 8 OZ PER BOTTLE

HAWS · PORTABLE EYE WASH 7602.10

Hazardous chemical spills occur in isolated areas all over the world everyday and, Haws is working to position models like the pressurized 10-gallon 7602.10 personal portable eyewash in these areas, providing a reliable source of safety for the irrigation process.

- Features a 10-gallon stainless steel tank.
- Protective measures include: air pressure gauge, pressure relief valve, tire-type air fill valve, and bacteriostatic additive that permits storage of water for up to six months.
- Measurements: 43“ high, 12 1/4“ diameter.
- Fill tank with water to an inside height of 17-1/4“, and pressurize tank to 90 psi. Should be used to complement plumbed or self-contained ANSI compliant emergency equipment, not in lieu of.

STOCK CODE	BRIEF DESCRIPTION
EWSH-HWS-ZZZ	HAWS, 7602.10 PORTABLE 10 GALLON EYEWASH

Optional items (additional cost): Model 9007 cart for site transport.
Other Models available : 7602.15, 7601.37 and 7601.10.2
For Other Models, please contact our sales personnel for more details.

HAWS · FOOT TREADLE SP220 (OPTIONAL)

Foot treadle SP220 is a complete foot control assembly, including chain, clamp, nut, ring, screw, spring and treadle. For use on pedestal and combination units.

STOCK CODE	BRIEF DESCRIPTION
ZMIS-HWS-ZFOOT	HAWS, SP220 FOOT CONTROL ASSEMBLY

Shown assembled to combination unit

HAWS · DRENCH SHOWER MODESTY CURTAIN 9037

Model 9037 protects your personnel by providing shower privacy for removal of contaminated clothing with our easy-to-install privacy curtain. It is designed to be used on horizontal emergency drench shower or combination emergency drench shower and eyewash units. This tyvek yellow curtain can be installed on new or previously installed models. With a quick sweep of the hand on both sides, the curtain wraps around to enclose the shower and user. Durability is provided by the corrosion resistant curtain rod. Partial water containment is provided by the curtain which helps minimize the danger of equipment damage. Privacy gown is included in the pocket of the curtain. Curtain length: 78“ diameter of Curtain Rod: 47-1/2“.

STOCK CODE	BRIEF DESCRIPTION
ZMIS-HWS-ZCURT	HAWS, 9037 MODESTY CURTAIN (W9101)

HAWS · DRENCH SHOWER TEST KIT 9010

Model 9010 shower test kit affords periodic shower testing with ease. The kit includes an upper corrosion resistant ring to encircle the shower head and tunnel shaped yellow Tyvek waterproof tube to guide the water column to model 9009 waster water container, or drain. Holding rod can be used as a handle for ease of testing by user. Testing record card included.

STOCK CODE	BRIEF DESCRIPTION
ZMIS-HWS-ZTEST	HAWS, 9010 TEST KIT FOR DRENCH SHOWER

NOAH

For more information or order,
please contact our Sales Team at
Tel: **(65) 6266-0788** or E-mail: **sales@noah.com.sg**

HAWS ANODYNE™

Haws Anodyne™ First aid eye rinse 0.9% Sodium Chloride. Provides immediate irrigation to the eye when plumbed or self-contained emergency eyewash stations are not readily available. Extended 36 months shelf life from date of manufacture provides a long lasting product. Units available in two sizes (16oz and 32oz) and in single or twin.

i) **7516: 1 x 16oz (500ml)**
sterilized isotonic
buffered solution with
hanger and sign
ii) **7516C: 2 x 16oz (500ml)**
sterilized isotonic
buffered solution with
hanger and sign
iii) **7532C: 2 x 32oz (1000ml)**
sterilized isotonic
buffered solution
with hanger and sign

STOCK CODE	BRIEF DESCRIPTION
EWSH-HWS-7516	HAWS 7516, ANODYNE 16OZ (500ML), SINGLE WALL MOUNTED STATION
EWSH-HWS-7516C	HAWS 7516C, ANODYNE 16OZ (500ML), TWIN WALL MOUNTED STATION
EWSH-HWS-7532C	HAWS 7532C, ANODYNE 32OZ (1000ML), TWIN WALL MOUNTED STATION

Other Models available : 7532C and 7532C.4

7516

7516C

7532C

FALL PROTECTION

SPERIAN
Protection you can trust

SPERIAN - CONFINED SPACE EQUIPMENT

SPERIAN Miller Confined Space Equipment consist of:

a) MightEvacUnit (MR50G/50FT) Self-Retracting Lifeline with emergency retrieval hoist (Galvanized wire rope)
b) 7ft (2M) Aluminium Tripod (Product Code 51/7FT)
c) Mounting Bracket for MightEvac Unit
d) Pulley (Product Code: CP105)
e) Other Accessories include Carabiner and Heavy Duty Equipment Bags

SPERIAN Miller MightEvac Unit with Integral Recovery Winch, Fall Indicator and Swivel Hook, Galvanized wire rope, 50ft (15m), EN360

- Easy to use with rescue winch, gear ratio 5:1
- Aluminium & stainless steel housing
- Compact design for heavy duty performance“

NOTE: MIGHTEVAC AVAILABLE IN 100 FT AND 120 FT
"NO ANNUAL FACTORY RECERTIFICATION REQUIRED“

NOAH

For more information or order,
please contact our Sales Team at
Tel: **(65) 6266-0788** or E-mail: **sales@noah.com.sg**

SPERIAN Miller Aluminium Tripod forms a firm base for the use of the Manhandler and/or MightEvac equipment for Confined Space applications, EN795(B)

- 7ft (2m)
- Withstand up to 5,000 lbs (22Kn) of vertical pull
- Adjustable legs with integral push pins
- Independent leg locking feature
- Safety Chain & Tripod Feet with Rubber Skid Pads and Serrated Edge

SPERIAN Miller Split Pulley for use with Man Handler Winch and MightEvac Recovery Winch; provides a smooth running performance for heavy-load hauling, EN12278

SPERIAN Miller Tripod Bracket to suit 50' (15M) MightEvac Winch for quick and easy attachment to Tripods, EN360

STOCK CODE	BRIEF DESCRIPTION
FALL-MIL-CSCP1	"SPERIAN" CONFINED SPACE EQUIPMENT C/W MIGHTEVAC,7FT (2 MTRS) TRIPOD & BRACKET
FALL-MIL-CSHTA	"SPERIAN" MILLER MIGHTEVAC, MR50G/50FT, SRL W/HOIST, 50FT
FALL-MIL-CSTP1	"SPERIAN" MILLER 51/7FT ALUMINIUM TRIPOD
FALL-MIL-CSPL1	"SPERIAN" MILLER CP105 PULLEY
FALL-MIL-CSTP1-A	"SPERIAN" MILLER TRIPOD BRACKET TO SUIT MIGHTEVAC HOIST

Full Body Harness
DL-30

- Simple one point cross over harness.
- Lightweight and easy to put on.

Full Body Harness
DL-31

- 2 Point Cross over harness.
- Comfortable, quick and easy to put on.
- Can be used in applications such as roof work, maintenance, construction and ladder climbing.

Full Body Harness
DL-35

- 3 Point Fall Arrest Harness with easy to adjust leg straps.
- Full Body harness with work positioning belt.

SPERIAN - FULL BODY HARNESS

STOCK CODE	BRIEF DESCRIPTION
FALL-BML-HDL30	"SPERIAN" DL-30 FULL BODY HARNESS, EN361 (REAR D-RING)
FALL-BML-HDL31	"SPERIAN" DL-31 FULL BODY HARNESS, EN361 (FRONT & REAR D-RING)
FALL-BML-HDL35	"SPERIAN" DL-35 FULL BODY HARNESS, EN361/ EN358 (FRONT, REAR & SIDE D-RING)

NOAH

For more information or order,
please contact our Sales Team at
Tel: **(65) 6266-0788** or E-mail: **sales@noah.com.sg**

Shock-absorbing Lanyard DL-51

- Shock absorbing rope lanyard designed to secure the user by limiting the range of movement to prevent the possibility of a fall.
- Hook opening 60mm

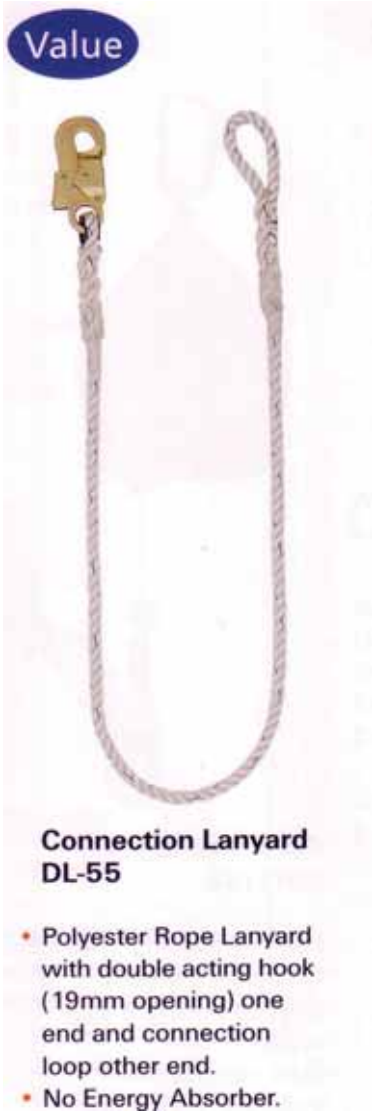

Connection Lanyard DL-55

- Polyester Rope Lanyard with double acting hook (19mm opening) one end and connection loop other end.
- No Energy Absorber.

Connection Lanyard DL-56

- Polyester Rope Lanyard with double acting Scaffolding Hook (60mm opening) one end and connection loop other end.
- No Energy Absorber.

LANDYARDS / SHOCK ABSORBERS

STOCK CODE	BRIEF DESCRIPTION
FALL-BML-HSAB1	"SPERIAN" DL-51 SHOCK ABSORBING LANYARD, 2MTR LANYARD (12MM DIA) WITH SCAFFOLDING HOOK & LOOP, EN355/EN354
FALL-BML-HLY02	"SPERIAN" DL-55, 2MTR LANYARD (12MM DIA) WITH SNAP HOOK & LOOP, EN354
FALL-BML-HLY03	"SPERIAN" DL-56, 2MTR LANYARD (12MM DIA) WITH SCAFFOLDING HOOK & LOOP, EN354

Relief Step Safety Device

Helps Prevent Suspension Trauma

The Miller Relief Step Safety Device alleviates the effects of orthostatic intolerance, also known as suspension trauma.

If a fall occurs, a person becomes suspended in a harness and remains both vertical and sedentary for a period of time, causing blood to "pool" in the veins of the legs. Subsequently, blood is restricted to the brain and other major organs that may initially result in unconsciousness. If not rescued promptly, serious injury or death may occur. The Miller Relief Step is designed to provide a short-term solution for alleviating suspension trauma.

Karabiner with Screw Lock

Lanyard Keeper

ACCESSORIES

STOCK CODE	BRIEF DESCRIPTION
FALL-MIL-ZRSSD	"SPERIAN" 9099X/12 RELIEF STEP SAFETY DEVICE (PER BOX OF 12 PCS)
FALL-BML-HKRI1	"SPERIAN" KARABINER WITH SCREW LOCK
FALL-LCL-XKEEP	LANYARD KEEPER

NOAH

For more information or order,
please contact our Sales Team at
Tel: **(65) 6266-0788** or E-mail: **sales@noah.com.sg**

FALCON
SELF-RETRACTING LIFELINE

SPERIAN MILLER FALCON SELF-RETRACTING LIFELINE

Nearly indestructible, the high impact-resistant nylon housing withstands the harsh rigors of the toughest applications. The lightest, most rugged line of composite retractables are designed with smooth, round edges to increase durability.

- Corrosion-resistant stainless steel and aluminum internal components extend service life and reduce replacement costs
- Lightest composite unit on the market – easy to handle and transport to/from jobsites; easy to install.
- Unique side payout design reduces wear on the entry guide bushing and cable for smooth operation with less drag
- Smooth, quiet operation; engineered spring retraction tension designed not to pull or drag on a worker to improve productivity and reduce fatigue
- Built-in, ergonomically-designed molded handle on the 50- (15m) and 65-ft. (20m) cable units provide support and leverage when attaching to anchorage connector.
- Dual swivels (unit top and snap hook) included on all models to minimize twisting of lifeline during use.
- New and improved load indicator on the snap hook identifies when the unit needs to be removed from service.
- No annual factory recertification required* – lowers cost of ownership and increases productivity
  (*Except in Canada where the Canadian Standards Association requires annual factory recertification.)
- Rated to 400 lbs. (181.4kg) capacity when using a SofStop shock absorber (928LS/18INYL)

STOCK CODE	BRIEF DESCRIPTION
FALL-MIL-11742	"SPERIAN" MILLER FALCON, 1011742 SRL, 10M GALVANIZED CABLE, WEIGHT: 5KG
FALL-MIL-11746	"SPERIAN" MILLER FALCON, 1011746 SRL,15M GALVANIZED CABLE, WEIGHT: 6.7KG
FALL-MIL-11729	"SPERIAN" MILLER FALCON, 1011729 SRL, 6.2M STAINLESS STEEL CABLE, WEIGHT: 4.1KG
FALL-MIL-11747	"SPERIAN" MILLER FALCON, 1011747 SRL, 15M STAINLESS STEEL CABLE, WEIGHT: 6.7KG
FALL-MIL-11751	"SPERIAN" MILLER FALCON, 1011751 SRL, 20M STAINLESS STEEL CABLE, 7.7KG

Meets all applicable OSHA, ANSI, CSA and CE Standards.

GAS DETECTOR & ACCESSORIES

PORTABLE GAS DETECTION ~ SINGLE GAS INSTRUMENTS

SPERIAN

BIOSYSTEMS TOXILTD

Biosystems ToxiLtd is a 2-year disposable gas detector that offers maintenance-free monitoring of CO or H2S. The ToxiLtd has a large LCD display and a 20-incident event logger.

Instrument Type	Single-sensor gas detector, 2-year disposable
Dimensions	3.33“ x 2.19“ x 1.16“ (8.44 cm x 5.56 cm x 2.95 cm)
Weight	3.4 oz (105 grams)
Gas Sensors Available	CO or H2S
Sensor Type	Electrochemical
Alarms	Two Factory-set alarm levels
Audible Alarm	Loud two tone alarm rated at 100dB at 10 cm
Vibrating Alarm	Optional
Visual Alarm	Bright red LED alarm light
Controls	One button operation, including automatic calibration
Clip	Alligator clip standard
Built-in Event Logger	Stores latest 20 events, including sensor type, max reading, average reading, start time and stop time
Readouts	Time remaining (months and days), peak (24 hours), time in alarm, and an option to view continuous real-time gas readings
Battery Life	2 years
Housing	Compact and rugged, clear polycarbonate with TPE overmold
Durability (IP Rating)	Water and Dust Rating IP65/IP67 (standard housing), IP66/IP67 (Plastite housing)
Standard Accessories Included	Calibration adapter, tubing, operator‘s guide and quick reference guide
Automatic Docking Station Available	Works with the Biosystems IQ Express Single-Gas Dock for automatic bump testing, calibration, instrument performance testing and record keeping
Safety Certifications	c-UL-us Classified for Class I, Div 1, Group A,B,C,D T4 | UL Classified for Class II, Div 1, Group E,F,G | CSA Classified for Class I, Div 1, Group A,B,C,D T4 | CSA Classified for Class II, Div 1, Group E,F,G | ATEX (DEMKO) EEx ia IIC T4 | IECEx Ex ia IIC T4 | CE Mark | CQST (China) Ex ia IIC T4 | Conforms to IEC 61000-4-3 (10 V/m) for RF Immunity

STOCK CODE	BRIEF DESCRIPTION
GDTR-B01-TLAHS	SPERIAN TOXILTD H2S, P/N 54-44-02, 2 YEARS, DETECTOR
GDTR-B01-TLAXS-V	SPERIAN TOXILTD H2S, WITH VIBRATOR, P/N 54-44-02V, 2 YEARS, DETECTOR
GDTR-B01-TLAO2	SPERIAN TOXILTD O2, P/N 54-44-90, 2 YEARS, DETECTOR
GDTR-B01-TLAO2-V	SPERIAN TOXILTD O2, WITH VIBRATOR, P/N 54-44-90V, 2 YEARS, DETECTOR

NOAH

For more information or order,
please contact our Sales Team at
Tel: **(65) 6266-0788** or E-mail: **sales@noah.com.sg**

BIOSYSTEMS TOXIPRO

Biosystems ToxiPro is a fully serviceable, reusable gas detector with continuous real-time gas readings.

Instrument Type	Single-sensor gas detector, replaceable battery and sensor
Dimensions	3.33“ x 2.19“ x 1.16“ (8.44 cm x 5.56 cm x 2.95 cm)
Weight	3.5 oz (110 grams)
Gas Sensors Available	02, CO, NH3, NO2, H2S, CO-H, Cl2, HCN, SO2, ClO2, PH3
Sensor Type	Electrochemical toxic gas sensor or Galvanic oxygen sensor
Alarms	Warning, Danger, TWA (if enabled) and STEL (if enabled)
Audible Alarm	Loud two tone alarm rated at 100dB at 10 cm
Vibrating Alarm	Optional
Visual Alarm	Three alarm windows with high visibility yellow and red alarm LEDs that chase
Low Battery Alarm	Standard
Display Backlight	Activates with button or alarm
Controls	One button operation, including automatic calibration
Clip	Alligator clip standard
Built-in Event Logger	Stores latest 20 events, including sensor type, max reading, average reading, start time and stop time
Black Box Data Recorder	Standard
Readouts	Continuous real-time gas readings, peak, STEL (if enabled), TWA (if enabled) and time of day readings
Replaceable Battery	Up to 9,000 hour battery life
Housing	Compact and rugged, clear polycarbonate with TPE overmold
Durability (IP Rating)	Water and Dust Rating IP65/IP67 (standard housing), IP66/IP67 (Plastite housing)
Standard Accessories Included	Calibration adapter, tubing, operator‘s guide and quick reference guide
Datalogger upgrade optional	Approx. 135 hrs. @ 1 min. interval (Interval can be changed with optional BioTrak software, IrDA required)
Automatic Docking Station Available	Works with the Biosystems IQ Express Single-Gas Dock for automatic bump testing, calibration, instrument performance testing and record keeping
Safety Certifications	c-UL-us Classified for Class I, Div. 1, Group A, B, C, D T4 | UL Classified for Class II, Div. 1, Group E, F, G | CSA Classified for Class I, Div 1, Group A,B,C,D T4 | CSA Classified for Class II, Div 1, Group E,F,G | ATEX (DEMKO) EEx ia IIC T4 | IECEx Ex ia IIC T4 | CE Mark | CQST (China) Ex ia IIC T4 | Conforms to IEC 61000-4-3 (10 V/m) for RF Immunity

STOCK CODE	BRIEF DESCRIPTION
GDTR-B01-TPLCO	SPERIAN TOXIPRO CO, P/N 54-45-01 DETECTOR
GDTR-B01-TPLHS	SPERIAN TOXIPRO H2S, P/N 54-45-02 DETECTOR
GDTR-B01-TPLHS-V	SPERIAN TOXIPRO H2S WITH VIBRATOR, P/N 54-45-02V DETECTOR
GDTR-B01-TPLHS-VD	SPERIAN TOXIPRO H2S, WITH VIBRATOR & DATALOG, P/N 54-45-02VD
GDTR-B01-TPLO2	SPERIAN OXYPRO O2, P/N 54-45-90 DETECTOR

BIOSYSTEMS IQ EXPRESS DOCKING STATION FOR TOXIPRO AND TOXILTD

The IQ Express Dock is the perfect complement to the ToxiPro and ToxiLtd personal gas detectors. The IQ Express Dock can bump and test configurations in just seconds reducing labor time and calibration gas costs. It also offers automatic recordkeeping which reduces liability

Automated Tests	The IQ Express Station automatically performs eight procedures, including instrument identification, battery test, alarm tests (audible, visible, vibrating-if applicable), bump test, fresh air calibration (if necessary), and record keeping.
Configuration Options	Standalone calibration station, connected to PC via USB or Ethernet (optional upgrade)
Easy Recordkeeping	The IQ Express dramatically improves compliance record-keeping efficiency and accuracy. You just put the gas detector in the dock and the IQ Express Station does the rest. Extremely cost-effective, IQ Express requires no testing or clerical skills and minimal effort by users. Workers can check their instruments quickly and easily.
Full Instrument Check-up	The IQ Express Station automatically performs eight procedures.
Automatic Calibration	If the bump test fails, IQ Express will automatically perform a full calibration without intervention from the user. Total processing time, including testing and calibration, is still under one minute.
Reduced Calibration Labor	A manual bump test of a single instrument takes the average user about 2 minutes. A IQ Express Dock can perform a bump test and other critical tests in seconds which results in significant labor costs over time.
Calibration Gas Savings	Sperian docks use a lot less gas than manual calibrations.
Reduced Legal Liability	No matter how good your recordkeeping is, manual systems are prone to error. In case of an accident, errors mean liability. The IQ Express Docking Station accurately and automatically records every test. Your recordkeeping is flawless.
Available Accessories	Demand flow regulators, calibration gas, calibration gas tank holder. ToxiPro and ToxiLtd sold separately

STOCK CODE	BRIEF DESCRIPTION
GDTR-B01-IQTP1	SPERIAN 54-46-9003 IQ EXPRESS DOCKING STATION FOR TOXIPRO/TOXILTD

NOAH

For more information or order,
please contact our Sales Team at
Tel: **(65) 6266-0788** or E-mail: **sales@noah.com.sg**

BIOSYSTEMS TOXI VISION IR AND EX

The Biosystems Toxi Vision is a durable single-sensor gas detector that features a rugged metal-plated case that is impervious to any weather condition while also providing RFI immunity.

Instrument Type	Single-sensor gas detector, replaceable battery and sensor
Dimensions	8.9 x 6.4 x 3.25 cm (3 1/2“ x 2 1/2“ x 1 1/4“ in)
Weight	190g (6.7 oz)
Gas Sensors Available	LEL, CO2, and CH4
Sensor Type	Non Dispersive Infrared (NDIR) and Catalytic Hot-Bead LEL
Alarms	Two factory-set alarm levels
Audible Alarm	Loud warbling two-tone alarm rated at 92 dBA
Vibrating Alarm	Optional
Visual Alarm	Bright red LED alarm light visible top and front
Display	Oversized Liquid Crystal Display
Display Backlight	Activates with button
Controls	One button operation, including automatic calibration
Clip	Built-in steel clip
Battery Type	Alkaline version provides up to 13 hours of operation. NiMH rechargeable version includes charger and provides up to 15 hours of operation.
Housing	Compact and rugged, chrome-metal plated, RFI resistant ABS with immunity to 40 V/m
Durability (IP Rating)	Meets IP65/IP67 water rating
Standard Accessories Included	Calibration adapter, reference manual and quick reference card
Safety Certifications	c-UL-us Classified for Class 1, Division 1, Group A, B, C, D hazardous locations; others pending

STOCK CODE	BRIEF DESCRIPTION
GDTR-B01-TVAEX	SPERIAN TOXIVISION EX LEL, P/N 54-37-80A, ALKALINE

Note: Toxi Vision IR ~ CO2 or CH4 version available - contact our sales personnel for more detail.

BIOSYSTEMS MULTIPRO

Biosystems MultiPro Confined Space Gas Detector monitors for O2, LEL, CO and H2S.

Instrument Type	Confined space multi-gas detector, replaceable battery and sensors
Dimensions	4 1/2" x 2 11/16" x 1 11/16" in (11.4 x 6.8 x 4.3 cm)
Weight	20oz/567g
Smart Sensors and Calibration	3 sensor capability. Select from O2, LEL, CO, H2S and Duo-Tox two channel CO/H2S sensor. User replaceable sensors. One button auto calibration. Calibration due reminder. Sensor span reserve indicators during calibration for predictive maintenance.
Sensor Types	Electrochemical, Catalytic Bead
Alarms	Two peak alarms, TWA and STEL for toxic channels
Audible Alarm	Two tone, loud audible alarm rated at 92 dBA
Vibrating Alarm	Optional
Visual Alarm	Bright-red LED alarm light
Low Battery Alarm	Standard
Display	Displays readings of up to 4 gases simultaneously on a front-mounted, segment type, easy to read LCD
Display Backlight	Automatically activated during an alarm condition, can be manually activated in dark or dimly lit areas.
Controls	One button operation and calibration
Clip	Clothes Clip Standard
Built-in Event Logger	Automatic event logging: 20 events, including sensor type, max, average, time, and duration. Built-in IrDA transceiver.
Black Box Data Recorder	Standard: Recorder with over 40 hours storage
Readouts	Real time readings of up to four gases simultaneously
Replaceable Battery	Interchangeable alkaline or rechargeable (Li-ion) versions. Up to 22 hours run time depending on battery type. Drop-in charger. Recharges in less than 5 hours.
Housing	Compact and rugged, solid polycarbonate case with a TPE (rubber) over mold, so it is both tough and easy to handle
Durability (IP Rating)	IP65 rated protection against water ingress
Standard Accessories Included	Operator's guide, Training CD-ROM, Rechargeable Li-ion version includes charger, clothes clip, laminated quick reference guide, calibration adapter
Datalogger upgrade optional	Provides convenient and easy downloading to a computer
Slip-on pump upgrade optional	Software controlled pump. Powered by the MultiPro battery. Automatic low flow alarm. Automatic leak test before every use.
Automatic Docking Station Available	Works with the Multipro IQ Express Docking Station providing automatic calibration and record keeping, reducing labor costs and saving on calibration gas cost.
Safety Certifications	• UL Class I, Division 1, Groups A, B, C, & D. Temperature Code T4• UL Class II, Division 1 Groups E, F, G• UL Class III• CSA Class I, Division I, Groups A, B, C, D Temp Code T4• ATEX Certification: II 2 G EEx ia d IIC T4, UL International DEMKO A/S 05 ATEX 0424116X• IECEx Certification: Ex ia d IIC T4, IECEx UL 07.0003X• Exceeds IEC 1000-4-3 for level 3 RFI immunity specifications

NOAH

For more information or order,
please contact our Sales Team at
Tel: **(65) 6266-0788** or E-mail: **sales@noah.com.sg**

STOCK CODE	BRIEF DESCRIPTION
GDTR-B01-MPA2	SPERIAN MULTIPRO 54-48-300A, LEL/O2, ALKALINE
GDTR-B01-MPA4	SPERIAN MULTIPRO 54-48-314A, O2/LEL/DUO-TOX<CO/H2S, ALKALINE
GDTR-B01-MPN2	SPERIAN MULTIPRO 54-48-300N5, O2/LEL, LI-ION RECHARGABLE
GDTR-B01-MPN4	SPERIAN MULTIPRO 54-48-314N5, O2/LEL/DUO-TOX<CO/H2S, LI-ION RECHARGABLE

BIOSYSTEMS IQ EXPRESS DOCKING STATION FOR MULTIPRO

A MultiPro IQ Express Dock is the perfect compliment to the MultiPro confined space multi-gas detector. The MultiPro IQ Express Dock can bump and test configurations in just seconds reducing labor time and calibration gas costs. It also offers automatic recordkeeping which reduces liability.

Automated Tests	The MultiPro IQ Express Station automatically performs eight procedures, including: instrument identification, battery test, audible alarm test, visual alarm test, vibrating alarm test (if applicable), bump test, fresh air calibration (if necessary) and record-keeping.
Configuration Options	Standalone calibration station, connected to PC via USB or Ethernet (optional upgrade)
Easy Recordkeeping	The MultiPro IQ Express dramatically improves compliance record-keeping efficiency and accuracy. You just put the gas detector in the dock and the MultiPro IQ Express Station does the rest. Extremely cost-effective, Multi-Pro IQ Express requires no testing or clerical skills and minimal effort by users. Workers can check their instruments and get to their jobs quickly and easily.
Full Instrument Check-up	The MultiPro IQ Express Station automatically performs eight procedures.
Automatic Calibration	If the bump test fails, MultiPro IQ Express will automatically perform a full calibration without intervention from the user. Total processing time, including testing and calibration just takes a little over a minute.
Reduced Calibration Labor	A manual bump test of a single instrument takes the average user about 2 minutes. A MultiPro IQ Express Dock can perform a bump test and other critical tests in seconds which results in significant labor costs over time.
Calibration Gas Savings	Sperian docks use a lot less gas than manual calibrations.
Reduced Legal Liability	No matter how good your recordkeeping is, manual systems are prone to error. In case of an accident, errors mean liability. The MultiPro IQ Express Docking Station accurately and automatically records every test. Your recordkeeping is flawless.
Available Accessories	Demand flow regulator, calibration gas, calibration gas tank holder

STOCK CODE	BRIEF DESCRIPTION
GDTR-B01-MPDIQ	SPERIAN IQ EXPRESS 54-49-9003,110V~230V FOR MULTIPRO

NOAH

For more information or order,
please contact our Sales Team at
Tel: **(65) 6266-0788** or E-mail: **sales@noah.com.sg**

BIOSYSTEMS PHD6

The Biosystems PHD6 is a state-of-the-art multi-gas detector from Sperian. It's the most configurable gas detector we've ever made with up to 6 channels of detection and over 19 sensor options.

Automated Tests	The IQ Express Station automatically performs eight procedures, including instrument identification, battery test, alarm tests (audible, visible, vibrating-if applicable), bump test, fresh air calibration (if necessary), and record keeping.
Configuration Options	Standalone calibration station, connected to PC via USB or Ethernet (optional upgrade)
Easy Recordkeeping	The IQ Express dramatically improves compliance record-keeping efficiency and accuracy. You just put the gas detector in the dock and the IQ Express Station does the rest. Extremely cost-effective, IQ Express requires no testing or clerical skills and minimal effort by users. Workers can check their instruments quickly and easily.
Full Instrument Check-up	The IQ Express Station automatically performs eight procedures.
Automatic Calibration	If the bump test fails, IQ Express will automatically perform a full calibration without intervention from the user. Total processing time, including testing and calibration, is still under one minute.
Reduced Calibration Labor	A manual bump test of a single instrument takes the average user about 2 minutes. A IQ Express Dock can perform a bump test and other critical tests in seconds which results in significant labor costs over time.
Calibration Gas Savings	Sperian docks use a lot less gas than manual calibrations.
Reduced Legal Liability	No matter how good your recordkeeping is, manual systems are prone to error. In case of an accident, errors mean liability. The IQ Express Docking Station accurately and automatically records every test. Your recordkeeping is flawless.
Available Accessories	Demand flow regulators, calibration gas, calibration gas tank holder. ToxiPro and ToxiLtd sold separately

>	STOCK CODE	BRIEF DESCRIPTION
	GDTR-B01-P6N01	SPERIAN PHD6, 54-53-B00005200N, PID, LI-ION RECHARGABLE

BIOSYSTEMS IQ6 DOCKING STATION

The Biosystems IQ6 Dock is an automatic calibration station and data download center for the Biosystems PHD6 multi-sensor gas detector. The IQ6 Dock can quickly bump and test configurations reducing labor time and calibration gas costs. It also offers automatic recordkeeping which reduces liability.

Automated Tests	The IQ6 Docking Station for PHD6 multi-gas detectors automatically performs eight procedures, including: instrument identification, battery test, audible alarm test, visual alarm test, vibrating alarm test, bump test, fresh air calibration (if necessary) and record-keeping.
Configuration Options	Standalone calibration station, connected to PC via USB or Ethernet (optional upgrade)
Easy Recordkeeping	The IQ6 Docking Station dramatically improves compliance record-keeping efficiency and accuracy. Just place the PHD6 multi-gas detector in the dock and the IQ6 Docking Station does the rest. Extremely cost-effective, the IQ6 dock requires no testing or clerical skills and minimal effort by users. Workers can check their instruments and get to their jobs quickly and easily.
Full Instrument Check-up	The IQ6 Docking Station automatically performs eight procedures.
Automatic Calibration	If the bump test fails, the IQ6 Docking Station will automatically perform a full calibration without intervention from the user. Total processing time, including testing and calibration just takes a little over a minute.
Reduced Calibration Labor	A manual bump test of a single instrument takes the average user about 2 minutes. An IQ6 Dock can perform a bump test and other critical tests in under a minute which results in significant labor costs over time.
Calibration Gas Savings	Sperian docks use a lot less gas than manual calibrations.
Reduced Legal Liability	No matter how good your recordkeeping is, manual systems are prone to error. In case of an accident, errors mean liability. The IQ6 Docking Station accurately and automatically records every test. Your recordkeeping is flawless.
Available Accessories	Demand flow regulator, calibration gas, calibration gas tank holder

The IQ6 Automatic Docking Station for the PhD6 multi-gas detector comes in 2-port and 4-port versions: 2-port version recommended for standard CO, O2, H2S and LEL sensors configuration. 4-port version recommended for units with IR sensor, PID sensor or non-standard configuration

>	STOCK CODE	BRIEF DESCRIPTION
	GDTR-B01-P6IQ	SPERIAN IQ6 DOCKING STATION, 54-54-9000N, FOR PHD6

NOAH

For more information or order,
please contact our Sales Team at
Tel: **(65) 6266-0788** or E-mail: **sales@noah.com.sg**

BIOSYSTEMS CANNONBALL3

The Biosystems Cannonball3 is rugged enough for the toughest environments. The Cannonball3 features an extra large display visible from several feet and a field replaceable modular internal pump.

Housing	Gasketed, water-resistant case constructed of an ABS material with an internal metallic spray coating designed to minimize the effects of radio frequency interference.
Durability (IP Rating)	Meets IP65 for water and dust protection.
Standard Accessories Included	Built-in sample draw pump. Remote sampling probe with 10“ of tubing and QD (quick disconnect) fittings. Shoulder strap. Rechargeable NiMH version includes charger. Operator‘s guide. Quick reference guide. Training video.
Datalogger	Provides convenient and easy downloading to a computer. Enables the Cannonball 3 to record and download measurements. This option is available as an upgrade after purchase. Download software must be purchased separately. Computer must support IrDA to download.
Pumps	Field replaceable pump module. Available with dual pumps for accurate dilution monitoring in inert environments without the use of a dilution orifice. Dilution calibration regardless of tube length. Automatic low flow alarm. Automatic leak test before every use.
Safety Certifications	• UL and C UL Class I, Division 1, Groups A, B, C & D, Temperature Code T3C• CENELEC (DEMKO) Eex ia d IIC T3C
Instrument Type	Confined space multi-gas detector, replaceable battery pack and sensors
Dimensions	12“ x 6.25“ x 6“ in (30 x 16 x 15 cm)
Weight	7 lbs./3.2kg (including battery pack)
Smart Sensors and Calibration	Four sensors. O2, LEL and up to three toxic channels using Duo-Tox two channel CO/H2S sensor. One button auto calibration. Calibration due reminder. Sensor span reserve indicators during calibration for predictive maintenance.
Sensor Type	Electrochemical, Catalytic Bead
Alarms	Peak, Overrange, TWA, STEL and Ceiling
Audible Alarm	Loud two-toned audible alarm rated at 105dB
Visual Alarm	Three bright-red LED alarm-lights visible on all sides
Low Battery Alarm	Standard
Display	Displays up to 5 gases on a large top-mounted graphics type LCD. Scratch-resistant, self healing urethane overlay keeps the display clear and easy to read even after years of use.
Display Backlight	Automatically activated in dark or dimly lit areas
Controls	One button operation including automatic calibration
Shoulder Strap	Standard
Black Box Data Recorder	Standard: Stores over 100 hours of readings and other data
Readouts	Varies by Operating Mode: Text only, Basic, Basic/Peak, Technician
Battery Packs	Rechargeable nickel metal hydride (NiMH) or disposable alkaline (5 „D“cell) battery packs. Operating life: NiMH: up to 16 hours, Alkaline: up to 24 hours. Snap-on fast charger included with rechargeable (NiMH) configuration. Recharges in 4 hours.

>

STOCK CODE	BRIEF DESCRIPTION
GDTR-B01-CB3A	SPERIAN CANNONBALL3, 54-35-30000A, LEL/O2, ALKALINE
GDTR-B01-CB3N	SPERIAN CANNONBALL3, 54-35-30000N, LEL/O2, NIMH RECHARGABLE

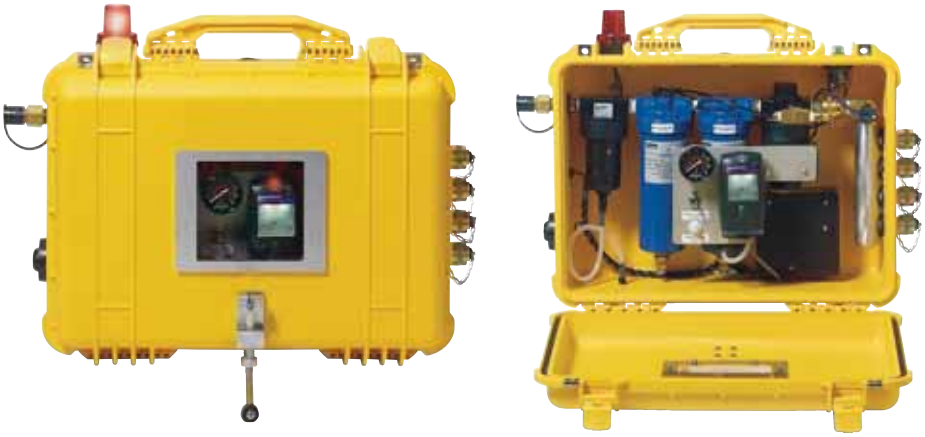

BIOSYSTEMS TRAVELPANEL 50MP

The Biosystems TravelPanel 50MP is a portable air filtration system designed to provide Grade-D breathing air for 1 to 4 workers using supplied air respirators.

Instrument Type	Portable air filtration system with built-in MultiProÔ gas detector
Dimensions	58 x 41 x 23 cm (23“ x 16“ x 9“ in)
Weight	11.3 kg/25 lbs.
Gas Sensors Available	Built-in MultiPro CO sensor, optional O2 sensor
Sensor Type	Built-in Multipro contains electrochemical sensor
Alarms	Optional low pressure alarm set to 80psi descending
Audible Alarm	High intensity audible alarm rated at a minimum of 108 dB at 30 cm
Visual Alarm	Automatic filter change indicator and optional LED strobe light
Display	Clear, built-in viewing window
Blackbox Data Recorder	Standard with datalogging capability
Filters	Primary - removal of moisture and oil mists, Coalescing - removal of particulate contaminants, Activated Charcoal - removal of odors and or organic vapors.
Controls	One button operation including automatic calibration
Power	Internal NiMH rechargeable battery or Alkaline version. External wall cube power supply.
Battery Life	Both Alkaline and NiMH Rechargeable versions offer run times as long as 100 hours
Housing	Rugged, Durable, Lightweight and Portable. Waterproof case. System can be operated and readings viewed with case closed and upright. Locking stabilizer legs available to keep the Travelpanel steady and upright during operation.
Standard Accessories Included	NiMH version includes charger/power supply

STOCK CODE	BRIEF DESCRIPTION
GDTR-B01-V50MP-A	SPERIAN, TRAVELPANEL 50MP, 54-50-121NR, CO, ALARM, YELLOW, NIMH

NOAH

For more information or order,
please contact our Sales Team at
Tel: **(65) 6266-0788** or E-mail: **sales@noah.com.sg**

BIOSYSTEMS NXP

The Biosystems NXP is a single fixed placement gas detection system that plugs into a standard wall outlet or can be wired into a controller power supply. Remote sensor option allows user to place the sensor up to 100 feet from base unit. Tough IP66, NEMA 4X housing protects unit in harsh conditions or during wash-downs.

Instrument Type	Fixed Gas Detection System
Dimensions	11.0" x 6.50" x 3.56" (279.44mm x 165.1 mm x 90.4 mm)
Weight	2.50 lbs. (1.14 Kg)
Smart Sensors and Calibration	Single sensor capability. Select from CO, H2S, SO2, CO-H, LEL or O2. Stand-alone, single person, non-intrusive calibration can be done at the sensor head.
Audible Alarm	Integrated 105 dB horn
Visual Alarm	Integrated, twin color high-intensity strobes offer 200+ degree visible alarm. Yellow for Warning, Red for Danger.
Housing	Weatherproof NEMA 4X (Light Grey or Safety Orange)
Durability Rating	IP66
Event Logger	Records last 128 alarm events
Display	Easy-to-read 3 digit backlit LCD screen
Accessories	Remote Sensor Kit, Cables and Replacement Smart Sensors

>	STOCK CODE	BRIEF DESCRIPTION
	GDSY-B01-ZNXP	SPERIAN, NXP FIXED GAS DETECTOR, IP66

Note: When ordering, please specify the type of sensors, length of wire (max 100ft/30 meters) and voltage required etc.

BIOSYSTEMS EXP

The Biosystems EXP is a single fixed placement gas detection system that is both cost effective and ultra easy to install. Remote sensor option allows user to place the sensor up to 100 feet (30 m) from base unit. Tough cast aluminum, explosion proof housing protects unit in harsh conditions or during wash-downs.

Instrument Type	Fixed Gas Detection System
Dimensions	7.75" x 6.20" x 4.3" (198 mm x 158 mm x 109 mm)
Weight	4.80 lbs. (2.18 Kg)
Smart Sensors and Calibration	Single sensor capability. Select from CO, H2S, LEL, CO-H, and O2
Audible Alarm	Integrated 105 dB horn
Visual Alarm	Integrated, twin color high-intensity LEDs. Yellow for Warning, Red for Danger.
Housing	Cast Aluminum, Explosion-Proof
Event Logger	Records last 128 alarm events
Display	Easy-to-read 3 digit backlit LCD screen
Accessories	Cables and Replacement Smart Sensors
Safety Certifications	UL Class I, Division 1, Groups B,C,D Temp Code T6 UL Class II, Division 1 Groups E,F,G, and Class III

>	STOCK CODE	BRIEF DESCRIPTION
	GDSY-B01-ZEXP	SPERIAN, EXP FIXED GAS DETECTOR, CLASS 1 DIV 1, 13-30VDC

Note: When ordering, please specify the type of sensors, length of wire (max 100ft/30 meters) etc.

SORBENT

3M Chemical Sorbents

Chemically inert sorbent material absorbs most chemicals and acids, resists reaction with most aggressive liquids. Available in pads, rolls, booms, pillows, particulate and folded formats to meet a variety of applications.

C-SKFL31

This spill kit combines the best of both worlds- chemical sorbent-folded (which can be used as boom, pillows or a roll) and high capacity chemical sorbent pads. This unique combination allows you to easily select the product to fit the response. Packaged in a 20-gallon drum, the kit can be placed in key locations throughout your facility and is easily identified by the bright yellow color. For fast transport to a spill site, it includes handy, easy-to-grip handles around the drum. Each kit contains 2 rolls of folded sorbent (each 5 inches by 50 feet), 30 pads (each 17 inches by 19 inches), 3 temporary disposal bags and ties, and one 20 gallon yellow drum.

P-110

Designed with quick and easy response in mind. Packaged in convenient dispenser boxes, for storage in confined spaces or mounting on a wall near where spills may occur. Able to sorb 17 Gallons/Case of 4 boxes. Per Box of 50 pads each 11 inches by 13 inches.

P-300

Pillows are designed with a scrim that encases particulate sorbent material. Pillows are used in areas where more capacity is desired than can easily be achieved using a sorbent pad. 50 Gallon/Pillow, 16 Pillows/Case.

P-200

Mini-booms are typically used to encircle spills and to contain leaks. A 3 inch diameter scrim on the outside of the boom identifies the application. This boom is 4 feet in length, 1 Gallon/Mini-boom, 12 booms/ Case.

For more information or order,
please contact our Sales Team at
Tel: **(65) 6266-0788** or E-mail: **sales@noah.com.sg**

P-500

Designed with quick and easy response in mind. An alternative solution to granules, this material can be sprinkled over a spill or broadcast over a large area. 15 Gallons/Bag, 12 Pounds/Case.

SRP-CHEM

Encased in a box for easy storage. Designed to be easily identifiable, and includes both mini-booms and pad styled sorbents. Ideal for use in laboratories, shipping docks or other areas where hazardous chemicals are shipped, stored or transferred. 3.5 Gallons/box, 3 Boxes/Case.

C-PD914DD

A low-profile design, so that it can be easily placed in tight areas. Ideal for cleaning up small spills and wiping down contaminated areas. Able to sorb 23.5 Gallons/Case. Each case has 6 boxes with 25 (9.25 inches by 14.5 inches) pads per box.

C-FL550DD

Folded Sorbent is dispensed in the form of a 5 inch wide continuous roll, perforated every 16 inches. Tearing at the perforations can customize the length needed, can be unfolded into pads or pillows. 5 inches X 50 feet (10.5 Gallons/50 foot section).

M-FL550DD

3M Maintenance folded sorbents is 4 sorbents in one. Can be used as a boom, sheet, pad or pillow, allowing one product to be stocked for almost any fluid spill. The high capacity sorbent has a scrim on one side to increase strength and help prevent linting. Perforations every 40cm allow selection of required length of sorbent so there is no waste. The handy dispenser allows easy on site or off site use. 31.5 Gallons/case of 3 boxes, 1 roll/box.

STOCK CODE	BRIEF DESCRIPTION
SORB-MMM-CHM01	3M C-SKFL31 31, GALLON CHEMICAL SPILL KIT CAPACITY: 31 GALLON/KIT
SORB-MMM-CHM02	3M P-110, CHEMICAL SORBENT PAD 11" X 13"
SORB-MMM-CHM03	3M P-300, CHEMICAL SORBENT PILLOWS 7" X 15"
SORB-MMM-CHM04	3M P-200, CHEMICAL SORBENT MINI BOOMS 3"DIA X 4'
SORB-MMM-CHM05	3M P-500, CHEMICAL SORBENT PARTICULATE
SORB-MMM-CHM06	3M SRP-CHEM, CHEMICAL SPILL RESPONSE KIT
SORB-MMM-CHM07	3M C-PD914DD, CHEMICAL SORBENT PADS, HIGH CAPACITY, APPROX. DIM: 9 1/4" X 14 1/2" 25 PADS PER BOX
SORB-MMM-CHM08	3M C-FL550DD, CHEMICAL SORBENT FOLDED 5" X 50'
SORB-MMM-MTN01	3M M-FL550DD, MAINTENANCE SORBENT FOLDED

3M™ Petroleum Sorbent

For control, cleanup and recovery of petroleum-based liquids. Repels water, can be reused or disposed of by incineration or fuel blending. Varieties include pads, rolls, booms, sweeps, pillows, drum covers, folded and particulate. Also available in static-resistant formats.

T-151

This highly sorbent pad features a low-profile design, for easy placement in tight areas. Ideal for cleaning up small spills and wiping down contaminated areas. Each bale sorbs 43.5 gallons, contains 200 pads (each 17 inches by 19 inches). (200 pads/bale)

P-SKFL31

PETROLEUM SPILL KIT, 31 GALLON - Can be stored indoors or outdoors. Easily identified by its bright white color. Packed in an element resistant 20-gallon drum. Combines both folded sorbent materials and high capacity pads which allow for selection of product for each response situation. (Per drum)

NOAH

For more information or order,
please contact our Sales Team at
Tel: **(65) 6266-0788** or E-mail: **sales@noah.com.sg**

T-4

Mini-Booms are a selective sorbent which will sorb hydrocarbon-based liquids (oleophilic) and repel aqueous-based liquids (hydrophobic). Mini-booms are typically used because of their tube-like shape to encircle spills and contain leaks. (12 mini booms/case)

T-30

Pillows are designed with a scrim that encases particulate sorbent material. Pillows are used in areas where more capacity is desired than can easily be achieved using a sorbent pad. (16 pillows/case)

T-156

This high capacity sorbent pad features a low-profile design, so that it can be easily placed in tight areas. Ideal for cleaning up small spills and wiping down contaminated areas. Each bale sorbs 37.5 gallons and contains 100 pads (each 17 inches by 19 inches). (100 pads/bale)

SRP-PETRO

Petroleum Spill Respond Kit will sorb hydrocarbon based liquids and repel aqueous based liquids. The pack is encased in a cardboard box which can be used as a warning sign and includes both mini-booms and pads.

HP-156

Easy to apply and retrieve, these pads are highly absorbent and can be used on land and water in numerous clean up and maintenance applications. 1.4L capacity per 43cm x 48cm pad.

STOCK CODE	BRIEF DESCRIPTION
SORB-MMM-PET02	3M T-151, PETROLEUM SORBENT PAD 17" X 19"
SORB-MMM-PET04	3M P-SKFL31 31, GALLON PETROLEUM SPILL KIT
SORB-MMM-PET05	3M T-4 PETROLEUM, SORBENT MINI BOOM 3" DIA X 4'
SORB-MMM-PET06	3M T-30, PETROLEUM SORBENT PILLOWS 7" X 15"
SORB-MMM-PET07	3M T-156, PETROLEUM SORBENT PAD 17" X 19" X 3/8"
SORB-MMM-PET08	3M SRP-PETRO, PETROLEUM SPILL RESPONSE KIT
SORB-MMM-PET09	3M HP-156, HIGH PERFORMANCE PETROLEUM SORBENT 17" X 19" X 1/4"

VENTILATORS

DRESSER-RAND

COPPUS Portable Ventilators

COPPUS CADET®

IDEAL FOR UTILITY UNDERGROUD AND LIGHT INDUSTRIAL CONFINED SPACE VENTILATION
These versatile, rugged, and economical ventilators deliver exceptional air flow in a compact, lightweight design—and their non-corrosive injection-molded housing is nearly indestructible. They are ideal for utility underground and light manufacturing confined space ventilation, and are available in a variety of models.

VANEAXIAL MODELS

MODEL VAC (VANEAXIAL MODELS)

- Flame-resistant UL94-5VA- rated injection-molded housing (5VA is the highest UL flame retardant rating possible)
- Glass-filled, polyester resin, spark-resistant fan blade
- Accommodates 8-inch (203 mm) flexible duct

MODEL VEP (VANEAXIAL HAZARDOUR LOCATION ELECTRIC DRIVE)

- Housing and components are constructed of special conductive polymers for safe dissipation of static charges
- Electric motors meet NEC Class 1, Division 1, Group D and Class II, Division I, Groups E, F, G specifications

STOCK CODE	BRIEF DESCRIPTION
VENT-COP-CVAC4	COPPUS, CADET VANEAXIAL, VAC4, ½ HP ELECTRIC MOTOR, TOTALLY ENCLOSED
VENT-COP-CVEP4	COPPUS, CADET VANEAXIAL, VEP4, ½ HP ELECTRIC MOTOR, HAZARDOUS LOCATION
VENT-COP-CX01	COPPUS, CADET VANEAXIAL TRIPOD
VENT-COP-CVEV2	COPPUS, CADET "E" SERIES VANEAXIAL, 1/4HP ELECTRIC MOTOR, TOTALLY ENCLOSED

*NOTE: Please specify Voltage/ Ph/ Hz when ordering.

NOAH

For more information or order,
please contact our Sales Team at
Tel: **(65) 6266-0788** or E-mail: **sales@noah.com.sg**

CENTRIFUGAL MODELS

MODEL CAC (CENTRIFUGAL MODELS)

- Excellent air flow and pressure performance
- Flame-resistant UL94 rated injection-molded housing
- Glass-filled, polyester resin spark-resistant fan blade
- Accommodates 8-inch (203 mm) duct at inlet and outlet ends
- Fan scroll can be positioned easily at 45-degree, 90-degree, and 180-degree discharge angles
- Available in electric and gasoline-driven models

MODEL CEP (CENTRIFUGAL HAZARDOUS LOCATION MODEL)

- Housing and components are constructed of special conductive polymers for safe dissipation of static charges
- Electric motors meet NEC Class 1, Division 1, Group D and Class II, Division I, Groups E, F, G specifications

STOCK CODE	BRIEF DESCRIPTION
VENT-COP-CAC4	COPPUS, CADET CENTRIFUGAL, ½ HP ELECTRIC MOTOR, TOTALLY ENCLOSED
VENT-COP-CEP4	COPPUS, CADET CENTRIFUGAL, ½ HP ELECTRIC MOTOR, HAZARDOUS LOCATION

*NOTE: Please specify Voltage/ Ph/ Hz when ordering.

COPPUS® DOUBLE-DUTY™ HEAT KILLER

Powerful Industrial Fan For Cooling Products, Processes And Personnel With airflows up to 17,000 cfm (28,890 m3/hr) the Double-Duty™ Heat Killer (DDHK) is one of the most powerful and versatile portable air movers on the market today. The patented, adjustable guide vane design allows air flow control—from a gentle breeze for personnel cooling, to a concentrated jet blast for product and process cooling.

FEATURES

- Adjustable guide vanes allow varied air movement from a gentle breeze to a jet blast
- Available in 18-, 24- and 30-inch (457, 610, 762 mm) models
- 18-inch (457 mm) and 24-inch (610 mm) models available with two-speed, totally enclosed motors (115V only)
- Models available in floor stand or wall mount models
- Heavy-duty, rugged steel housing and frame
- Protective screens meet OSHA guidelines
- Available with TE and EP motors
- Hazardous location switches and motors meet NEC Class I, Division I, Group D and Class II, Division I, Groups F and G specifications
- Thermal overload protection on motors

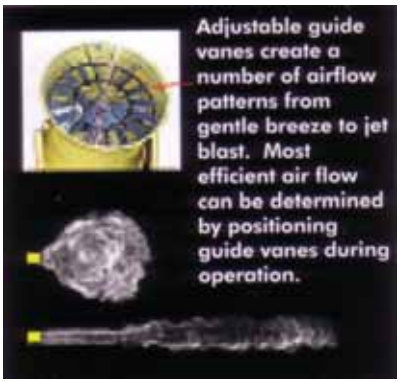

STOCK CODE	BRIEF DESCRIPTION
VENT-COP-ZDDHK	COPPUS, DOUBLE DUTY HEAT KILLER WITH 4 POINT STAND

*NOTE: Please specify Voltage/ Ph/ Hz when ordering.

COPPUS® CP-20
AIR OR STEAM TURBINE DRIVEN BLOWER/EXHAUSTER

This powerful fan is designed for fast and thorough degassing, ventilating or cooling of large process vessels such as columns, towers, reactors, scrubbers, furnaces and storage tanks.

STOCK CODE	BRIEF DESCRIPTION
VENT-COP-ZCP20	COPPUS, CP-20, TURBINE DRIVEN FAN, UPTO 11,200CFM, 19,029M3/HR

NOAH

For more information or order,
please contact our Sales Team at
Tel: **(65) 6266-0788** or E-mail: **sales@noah.com.sg**

COPPUS® MARINE VENTURI

LIGHTWEIGHT, DECK-MOUNT, COMPRESSED AIR DRIVE VENTILATOR
Easy to transport, rugged and maintenance-free shipboard ventilator for degassing or delivering fresh air supply to cargo tanks and other on-board confined spaces.

OPERATING PRINCIPLE
Compressed air or steam is admitted into the Marine Venturi through a single inlet connection in the housing leading to the mixing chamber. The air from the nozzle creates a Venturi action that induces a large volume of surrounding air to enter through the inlet end. The air is then forced out through the outlet at high velocity.

FEATURES
- Delivers 4,870 cfm (8,274 m3/hr) operating with 100 psig compressed air
- Spark-resistant, corrosion- resistant, powder-coated aluminum construction
- Weighs only 32 lbs (15 kg)
- Mates with 12-inch (320 mm) Butterworth deck openings in either supply or exhaust set-up
- Built-in flange on outlet end accepts 12-inch (320 mm) flexible duct, nozzles
- Stainless steel fasteners, studs, and protective screen

SPECIFICATIONS FOR MARINE VENTURI

INLET PRESSURE psig (kg/cm²)	TOTAL AIRFLOW cfm (m³/hr)	AIR CONSUMED cfm (m³/hr)	INDUCTION RATIO
60 4.2	3,980 (6,762)	98 (167)	40.6
80 5.6	4,500 (7,645)	126 (214)	35.7
100 7	4,870 (8,274)	150 (214)	31.8

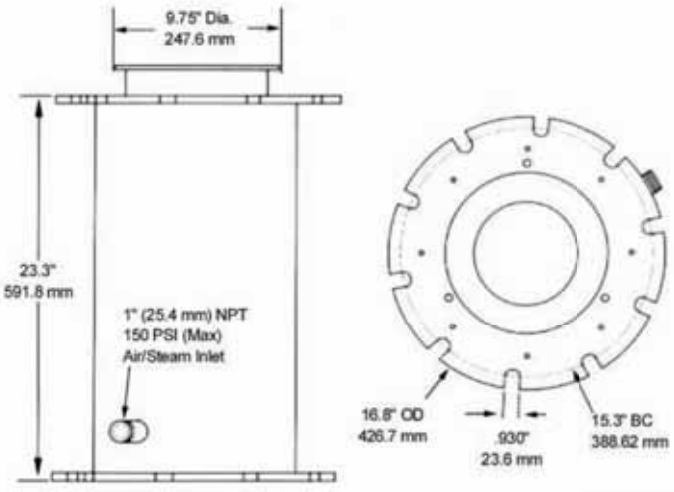

STOCK CODE	BRIEF DESCRIPTION
VENT-COP-MVTR1	COPPUS, MARINE VENTURI, 12"/320MM BLOWER WITH BUTTERWORTH FLANGE

COPPUS® REACTION FANS (AIR-DRIVEN REACTION FANS) (RF-12, RF-16, RF-20, RF-24)

Rugged, cast aluminum housing and fan blade make these fans ideal for hazardous locations and demanding ventilation projects. The RF design utilizes action-reaction principles; compressed air is discharged through nozzles located at the tip of the fan blade providing extremely efficient, high-volume, low-maintenance air movers.

RF-12

RF-16

RF-12, RF-16 FEATURES

- 2,100 to 5,100 cfm (3,566 to 8,665 m3/hr) at 80 psig
- Use for fresh air supply or fume exhaust
- Low compressed air consumption
- Spark-resistant, cast-aluminum housing and fan blade
- Virtually maintenance free
- Permanently lubricated bearings eliminate line oiler
- Cast-in handles and feet
- Cast-in bead to accept 12-inch (305 mm) and 16-inch duct (406 mm)
- Bolt holes allow attachment of optional adapter plates

RF-20 AND RF-24

RF-20, RF-24 FEATURES

- 11,000 to 16,900 cfm (18,689 to 28,713 m3/hr) at 80 psig
- Use for fresh air supply or fume exhaust
- Can be carried or rolled to job site
- Spark-resistant cast aluminum housing and fan blade
- Permanently lubricated bearings
- Flanges mate with 20-inch (508 mm) and 24-inch (610 mm) API tank openings

NOAH

For more information or order,
please contact our Sales Team at
Tel: **(65) 6266-0788** or E-mail: **sales@noah.com.sg**

SWING-OUT ASSEMBLY FOR RF-20/24 AND CP-20

Personnel and equipment egress or entrance to tanks and vessels can be achieved quicker, easier and safer with the RF-20/24 and CP-20 swing-out models; mounts to standard API 20-inch (508 mm) or 24-inch (610 mm) tank openings. Swing-out gate (constructed of cast aluminum) is held in closed position with industrial strength hook and loop fastener that can be opened and closed easily by pulling or pushing.

STOCK CODE	BRIEF DESCRIPTION
VENT-COP-RF12	COPPUS, RF-12, AIR-DRIVEN REACTION FAN
VENT-COP-RF16	COPPUS, RF-16, AIR-DRIVEN REACTION FAN
VENT-COP-RF20	COPPUS, RF-20, AIR-DRIVEN REACTION FAN
VENT-COP-RF24	COPPUS, RF-24, AIR-DRIVEN REACTION FAN
VENT-COP-ZXRF1	COPPUS, SWING-OUT BRACKET ,150# FOR RF-20, CP-20
VENT-COP-ZXRF2	COPPUS, SWING-OUT BRACKET, 300# FOR RF-20, CP-20
VENT-COP-ZXRF3	COPPUS, SWING-OUT BRACKET, 150# FOR RF-24

COPPUS® JECTAIR® HP AND HORNET HP

HIGH-PERFORMANCE, HIGHLY EFFICIENT VENTURI AIR MOVERS

The unmatched performance of the COPPUS Jectair® HP is recognized throughout the industry. When compared with older-style air horns, the patented air mixing chamber of the Jectair® HP can produce up to a 40:1 air flow conversion and up to 26 percent savings on com¬pressed air consumption (see efficiency performance charts on next page).

JECTAIR® HP

OPERATING PRINCIPLE

Compressed air or steam is admitted into the Jectair through a single inlet connection in the housing leading to the mixing chamber. The air or steam jetted from the nozzle creates a “Venturi” action that induces a large volume of surrounding air to enter the Jectair through the aerodynamic inlet bell. The air is then discharged at high velocity through the horn-shaped diffuser.

NOTE: Operating efficiency depends on compressed air volume and pressure

FEATURES

- Available in five sizes: 3S-HP, 3-HP, 6-HP, 8, or 9
- High-performance (HP) and Hornet models available in three sizes: 3S-HP, 3-HP, and 6-HP
- Air flows range from 1,370 to 8,900 cfm (2,328 to 15,121 m3/hr)
- Induction ratios up to 40:1
- Multiple expansion nozzles machined into housing
- High static pressure capabilities
- Diffuser material available in steel, aluminum or shock-resistant polymer (Hornet HP)
- No moving parts (virtually maintenence-free)
- Static bonding cable (standard on all models) with spring tension grip and replaceable contact tips
- Accepts flexible duct on diffuser end (optional duct adapter for inlet end available)
- Tripod for stationary mounting available

JECTAIR® HORNET HP

FEATURES

The Jectair Hornet HP features a lightweight, shock-resistant, conductive polymer diffuser that is virtually indestructable

- Available in three sizes: 3S-HP, 3-HP, and 6-HP
- Polymer safely dissipates static electricity charges
- Diffuser is constructed of linear low-density polyethylene, rated UL 94-V2 with maximum operating temperature of 160 degrees Fahrenheit (93 degrees Celcius)

NOAH

For more information or order,
please contact our Sales Team at
Tel: **(65) 6266-0788** or E-mail: **sales@noah.com.sg**

EFFICIENCY PERFORMANCE

INDUCTION RATIO = cfm of total airflow/cfm of compresed air

INLET PRESSURE	MODEL	AIR FLOW cfm (m³/hr)	AIR CONSUMED (scfm)	INDUCTION RATIO
60 psig 4,2 kg/cm²	3S-HP	1370 (2328)	47 (80)	29.1
	3-HP	1520 (2595)	47 (80)	32.3
	6-HP	3980 (6762)	98 (167)	40.6
	8	5600 (9515)	178 (302)	31.5
	9	6880 (11,096)	265 (450)	25.8

INLET PRESSURE	MODEL	AIR FLOW cfm (m³/hr)	AIR CONSUMED (scfm)	INDUCTION RATIO
80 psig 5,6 kg/cm²	3S-HP	1530 (2600)	61 (104)	25.1
	3-HP	1700 (2888)	61 (104)	27.8
	6-HP	4500 (7645)	126 (214)	35.7
	8	6250 (10,620)	233 (396)	26.8
	9	8000 (13,592)	366 (571)	23.8

INLET PRESSURE	MODEL	AIR FLOW cfm (m³/hr)	AIR CONSUMED (scfm)	INDUCTION RATIO
100 psig 7 kg/cm²	3S-HP	1660 (2820)	72 (122)	23.0
	3-HP	1860 (3160)	72 (122)	25.8
	6-HP	4870 (8274)	153 (260)	31.8
	8	6750 (11,469)	282 (479)	23.9
	9	8900 (15,121)	410 (697)	21.7

Maximum operating pressure of 150 psig on compressed air or steam

PERFORMANCE THROUGH VARIOUS LENGTHS OF FLEXIBLE DUCT AT 80 PSIG (7 KG/CM²)

High static pressure capabilities of the Jectair HP air mover permit use of long runs of flexible duct on outlet or inlet diffuser

MODEL	DUCT diameter	FREE AIR cfm (m³/hr)	20-ft /6 m cfm (m³/hr)	30-ft / 9 m cfm (m³/hr)	40-ft / 12 m cfm (m³/hr)	50-ft / 15 m cfm (m³/hr)
3-HP	8-in (203 mm)	1700 2888	1550 (2634)	1480 (2515)	1410 (2396)	1350 (2294)
6-HP	12-in (305 mm)	4500 (7645)	4020 (6830)	3860 (6558)	3715 (6312)	3580 (6083)
8	14-in (356 mm)	6250 (10,620)	5550 (9431)	5280 (8972)	5050 (8581)	4850 (8241)
9	14-in (356 mm)	8000 (13,592)	6850 (11,640)	6550 (11,130)	6250 (10,620)	6000 (10,195)

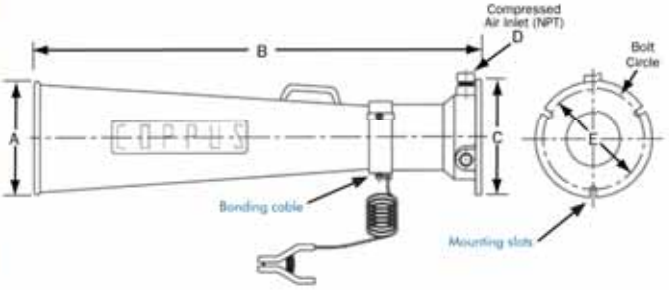

MODEL	A	B	C	D	MOUNTING SLOTS E	No.	Width	Wt.
3S-HP	6.0 (152)	16.5 (419)	7.5 (190)	0.5 (13)	6.5 (165)	3	0.4 (10)	6 lbs (2, 7 kg)
3-HP	7.3 (185)	33.0 (838)	7.5 (190)	0.5 (13)	6.5 (165)	3	0.4 (10)	9 lbs (4, 1 kg)
6-HP	12.0 (305)	44.2 (1123)	11.5 (292)	1 (25)	10.8 (274)	3	0.4 (10)	21 lbs (9, 5 kg)
8	14.0 (356)	46.0 (1168)	14.3 (363)	1 (25)	13.5 (343)	3	0.5 (13)	35 lbs (15, 9 kg)
9	14.0 (356)	46.0 (1168)	16.8 (427)	1 (25)	15.3 (387)	10	0.9 (23)	42 lbs (19, 0 kg)

SAFETY PRECAUTIONS

- Use bonding cables (standard on all COPPUS Jectair air movers) when operating in hazardous locations to prevent static electricity discharges
- Secure unit before admitting compressed air (or steam) to prevent damage or injury from high-reaction force
- Do not allow solid objects or debris to enter inlet housing during operation
- When exhausting fumes from an enclosed vessel, take care not to create a vacuum that could collapse the vessel

BLOCKED TIGHT STATIC PRESSURE

MODEL	INLET PRESSURE 60 psig (4,2 kg/cm²)	80 psig (5,6 kg/cm²)	100 psig (7 kg/cm²)
3S-HP	5.8-in (147 mm)	7.5-in (191 mm)	8.9-in (224 mm)
3-HP	5.8-in (147 mm)	7.5-in (191 mm)	8.9-in (224 mm)
6-HP	4.3-in (109 mm)	5.6-in (132 mm)	6.7-in (170 mm)
8	3.9-in (99 mm)	5.2-in (132 mm)	6.2-in (157 mm)
9	5.5-in (140 mm)	6.8-in (173 mm)	7.7-in (196 mm)

STOCK CODE	BRIEF DESCRIPTION
VENT-COP-JA301	COPPUS, JECTAIR STANDARD, 3-HP, AIR MOVERS
VENT-COP-JA302	COPPUS, JECTAIR STANDARD, 3-HP, HORNET, AIR MOVERS
VENT-COP-JA3	COPPUS, JECTAIR STANDARD, 3S-HP, AIR MOVERS
VENT-COP-JA601	COPPUS, JECTAIR STANDARD, 6-HP, AIR MOVERS
VENT-COP-JA602	COPPUS, JECTAIR STANDARD, 6-HP, HORNET, AIR MOVERS

FLEXIBLE AIR DUCT

A large selection of flexible air duct for a variety of ventilation applications is available. Our most popular heavy-duty duct features impregnated polyester material designed for harsh, industrial environments. Other options include economical light-duty duct, source capture duct and hazardous location, anti-static duct.

FEATURES AND SPECIFICATIONS (ALL VARIETIES)

- Wire supported, non-collapsible
- Quick and easy cinch belt securely fastens duct to blower housings and duct ends
- Integral rigid duct end allows easy coupling of duct without the need for separate splicer accessory
- Available diameters are 8-inch (203 mm), 12-inch (304.8 mm), 16-inch (406 mm), 20-inch (508 mm), and 24-inch (610 mm); larger diameters available on request
- Available lengths: 10-foot (3 m) and 25 foot (7.5 m); duct can be coupled together for longer runs
- Temperature range: -40 degrees F (-40 degrees C) to +250 degrees F (+121 degrees C)
- Meets UL-94 specifications for flame retardant material
- Retractable for easier, safer storage
- Source capture duct: close-pitched, wire-supported, features smooth interior walls for reduced flow restriction; available in 4-inch (102 mm), 5-inch (127 mm) and 6-inch (152 mm) diameters

STOCK CODE	BRIEF DESCRIPTION
VENT-COP-DHD08-10	COPPUS, FLEXIBLE DUCT, HEAVY DUTY NON-COLLAPSIBLE, 8" X 10' COUPLING/CLAMP
VENT-COP-DHD08-20	COPPUS, FLEXIBLE DUCT, HEAVY DUTY NON-COLLAPSIBLE, 8" X 20' COUPLING/CLAMP
VENT-COP-DHD12-10	COPPUS, FLEXIBLE DUCT, HEAVY DUTY NON-COLLAPSIBLE, 12" X 10' COUPLING/CLAMP
VENT-COP-DHD12-20	COPPUS, FLEXIBLE DUCT, HEAVY DUTY NON-COLLAPSIBLE, 12" X 20' COUPLING/CLAMP
VENT-COP-DHD16-15	COPPUS, FLEXIBLE DUCT, HEAVY DUTY NON-COLLAPSIBLE, 16" X 15' COUPLING/CLAMP
VENT-COP-DVIN8-15	COPPUS, FLEXIBLE DUCT, NON-COLLAPSIBLE, 8" X 15' COUPLING/CLAMP FOR CADET SERIES

NOAH

For more information or order,
please contact our Sales Team at
Tel: **(65) 6266-0788** or E-mail: **sales@noah.com.sg**

DUCT CANISTER

Extend the life of your duct with the protection of a COPPUS high-density, light-weight polyethylene canister; makes transporting and storage easier and safer.

STOCK CODE	BRIEF DESCRIPTION
VENT-COP-CAN08	COPPUS, DUCT STORAGE CANISTER, 8" X 25' (203MM X 7500MM)
VENT-COP-CAN12	COPPUS, DUCT STORAGE CANISTER, 12" X 20' (305MM X 6000MM)
VENT-COP-CAN16	COPPUS, DUCT STORAGE CANISTER, 16" X 30' (406MM X 9000MM)

*Tripod only (jectair hornet not included)

JECTAIR TRIPOD

For stationary, long-term use; rotates 360-degrees for precise direction of air-flow and accommodates 3-HP and 6-HP Jectair sizes. Installs quickly and eas¬ily with two quick-release clamps. Large feet provide stability during operation, and spring-loaded legs fold up for easy transport and storage.

STOCK CODE	BRIEF DESCRIPTION
VENT-COP-ZJAX1	COPPUS, JECTAIR TRIPOD FOR 3-HP & 3-HP HORNET
VENT-COP-ZJAX2	COPPUS, JECTAIR TRIPOD FOR 6-HP & 6-HP HORNET

Lifeguard on Duty

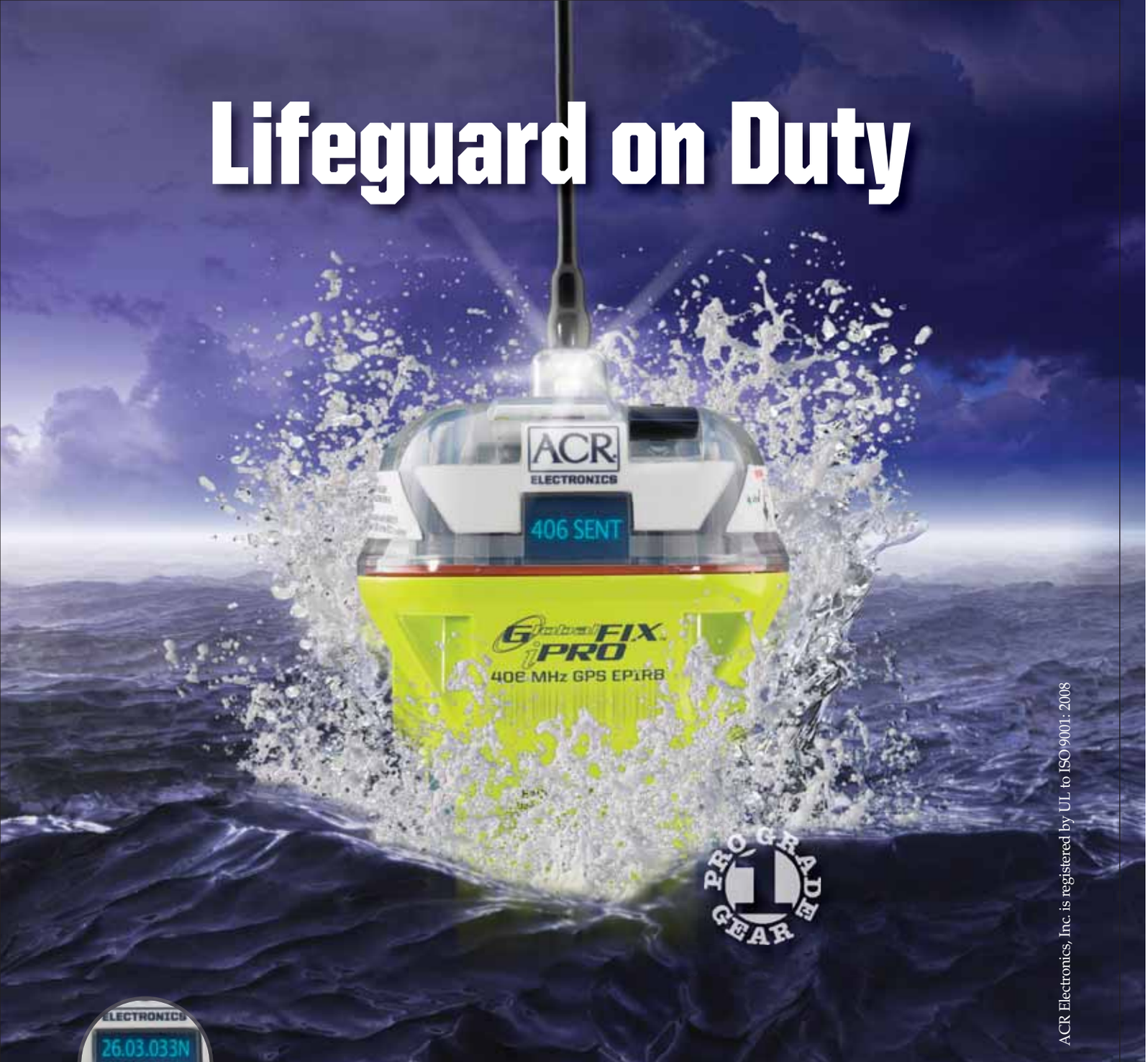

ACR Electronics, Inc. is registered by UL to ISO 9001:2008

New iPRO display screen confirms EPIRB action

Our new GlobalFix™ iPRO can save the day when your life is on the line. It's the ultimate in high-tech reliability, thanks to exclusive new features like a digital display that reveals the EPIRB's electronic activities. With internal and external GPS functions, it transmits your LAT/LON in just minutes.

Using the proven COSPAS-SARSAT system that has saved nearly 27,000 lives, ACR beacons account for at least 60 percent of registered beacons worldwide. ACR's iPRO, with exclusive features and built-in redundancies, will acquire a location even where GPS can't to bring help quickly. You can trust it to work because the technology inside has been torture tested in impossibly harsh conditions. And there's no subscription fee.

Make sure iPRO is on duty when you need it.

THE SCIENCE ACR ELECTRONICS OF SURVIVAL

COBHAM

www.acrelectronics.com

NARWHAL® INFLATABLE CRAFT CE

NARWHAL S.O.L.A.S. RESCUE BOATS

Narwhal´s industrial adventure begins in 1957. Since then, our rigid inflatable boats have been constantly developed, and the manufacture process of our boats is based on three fundamental aspects: SAFETY, RESISTANCE AND QUALITY.

Our SV rescue boats S.O.L.A.S. approved range comprises two models: SV 420 and SV 480. We are currently developing a new SV Model, 6.20 meters length, which will receive the S.O.L.A.S. approval as regular rescue boat and as fast rescue boat as well by the end of 2009. SV 420 model is approved for a 25 hp engine, being the towing capacity in that case 188kg, and it is approved as well to be used with a 40 hp engine, improving the towing capacity up to 305 kg. SV 480 has a wider engine range and the boat can be equipped with engines of 40, 50, 60 and 75 hp, reaching with the last engine mentioned (75 hp) a towing capacity of 400 kg. Our SV boats have transverse seats for all the passengers with bow locker to storage the S.O.L.A.S. equipment and enough room on deck to place the approved stretcher for injured person transportation when needed.

Our SV range is being sold all around the world and we offer five years guarantee on the tube fabric showing our trust on the quality of our products.

TECHNICAL CHARACTERISTICS

MODEL	SV-420	SV-480
Length overall	420 cm	480 cm
Length inside	306 cm	354 cm
Beam overall	207 cm	210 cm
Beam inside	123 cm	110 cm
Maximum depth	100 cm	100 cm
Max. tube Ø	50 cm	51 cm
No. independent compartments	5+1	5+1
Max. authorized motor power	25 CV ó 40 CV	40/50/60 ó 75 CV
Motor shaft type	L	L
Max. authorized No. of persons	6	6
Max. authorized paid load	671 Kg.	673 Kg.
Approx. weight of boat	200 Kg.	250 Kg.
Aprrox weight with max. charge	871 Kg.	923 Kg.
Approval	S.O.L.A.S.	S.O.L.A.S.

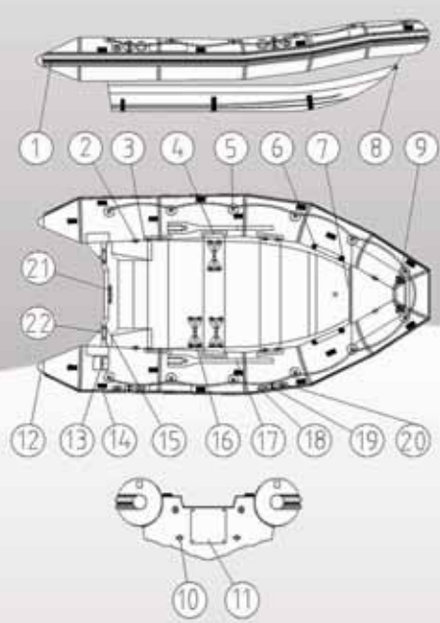

STANDARD EQUIPMENT

1. All around reinforced strake fender
2. Automatic relief valves
3. Reinforced inflation/deflation valves
4. Foldable benches
5. Ring with line
6. Float quoit line holder set
7. Equipment locker
8. Mooring-towing rings
9. Line holder
10. Deck draining valve
11. Out-transom reinforced plate
12. Reinforced stern cones
13. Fitting for position light
14. Reflective tape
15. Lifting rings
16. Retainers for fuel tank
17. Paddle-boat hook
18. Righting labels
19. Righting line holder
20. Righting line ring
21. In-transom reinforced plate
22. Towing rings

S.O.L.A.S. CERTIFICATE

DET NORSKE VERITAS
EC TYPE-EXAMINATION CERTIFICATE

www.narwhal.es
DAYFER, S.L. - NARWHAL Inflatable Craft
Veigadaña 145-PETELOS
36416 Mos-PONTEVEDRA- ESPAÑA
Tel.: (34) 986 339 414 Fax: (34) 986 339 527
E-mail: export@narwhal.es

SERVICING

SERVICING

Right where you need them, any time, any day, our service team, backed by a fully-equipped service station can carry out inspection, testing and repair or equipment. Promptly and quickly.

A full service team to handle your needs 24 hours a day, 365 days a year.

Our service station is capable of handling.

Inflatable Life Raft Servicing

- Approved and authorized by Marine Department of Singapore, Classification Societies and the manufacturers

Inflatable Boats

- We are able to service all makes of inflatable boat, RIB and FRCs

Inflatable Life Jacket

- Our manufacturer trained technicians are able to do testing the buoyancy chamber for air leaks, check of the fully automatic inflation system and repairs if necessary

Immersion Suits

- Our manufacturer trained technician, test the suit for leakage and repairs your suit to prolong their life.

Gas Detection

- Qualified service technicians for quick service and calibration to make sure that there is minimal down time.

Breathing Apparatus

- Computerized servicing with hydrotesting and refilling facility for cylinders.

Chemical Suits

- Testing to make sure your chemical suits perform to specifications

Rental

- Confined space equipment, ranging from airlines, breathing apparatus and gas detectors are available. Training can also be provided

Wiper

- Design, Assemble, Supply and Commission suitable wiper models in providing best wiping coverage to different window size, type and configuration.

Fire Fighting Equipment And Fixed Systems

- Fully equipped workshop (Approved by Singapore Fire Bureau and various classification bodies) for servicing, hydrotesting and refilling of fire extinguishers and fire fighting systems.

CONTENTS

PRODUCT CODE	PRODUCTS	PAGE
	SERVICING/TESTING/INSPECTION 24 HOURS A DAY, 365 DAYS A YEAR	
RAFT	**A) INFLATABLE LIFERAFTS**	300
JINF	**B) INFLATABLE LIFEJACKETS**	301
EXTG/FSYS	**C) FIRE FIGHTING / FIXED SYSTEMS**	302
GDTR	**D) GAS DETECTION**	303
RESA	**E) BREATHING APPARATUS**	304
IMMS	**F) IMMERSION SUITS**	305
BOAT	**G) INFLATABLE BOATS**	306
CLCH	**H) CHEMICAL SUITS**	307
OTHER SERVICES	**RENTAL** A) LIFERAFTS B) BREATHING APPRATUS C) AIRLINE SYSTEMS D) GAS DETECTORS	308
	TRAINING A) BREATHING APPARATUS B) FIT TESTING C) CONFINED SPACE ENTRY & RESCUE D) SPILL KIT TRAINING	

INFLATABLE LIFERAFT SERVICING

- Approved and authorized by the Marine Department of Singapore as well as various manufacturers.
- Our fully equipped workshop is able to accommodate up to 6 units of inflated 25men life rafts concurrently.
- Highly trained inspectors and necessary equipment to ensure the quickest possible turnaround time for urgent requirements of life rafts servicing.

OTHER VALUE ADDED SERVICES OFFERED

- Free Warehousing - at our premises and diligent tracking of customers' life rafts, which are used for rotation / exchange between their vessels.
- Exchange Program – supplying and interchanging life rafts on an exchange basis.
- Logistic - arrangements to collect life rafts that we are not authorized to service from the vessel, having the life rafts serviced at the authorized service station and upon completion, return the same to the vessel.
- Rental – we are also able to support all requirements for rental life rafts.

NOAH

For more information or order,
please contact our Sales Team at
Tel: **(65) 6266-0788** or E-mail: **sales@noah.com.sg**

INFLATABLE LIFEJACKET SERVICING

- Approved by various manufacturers to carry out the servicing of lifejackets.
- Our manufacturer trained technicians carry out a full testing of all received lifejackets, inclusive of testing of the buoyancy chambers, auto inflation mechanism and carry out repairs as necessary to ensure proper function of the lifejackets.
- Highly trained inspectors and necessary equipment to ensure the quickest possible turnaround time for urgent requirements.
- Contracted with the Singapore Police Coast Guard and the Republic of Singapore Navy for the servicing of their lifejackets.
- Customers include Classification Societies such as Lloyds and ABS, among many.

OTHER VALUE ADDED SERVICES OFFERED

- Rental – Noah is able to provide rental lifejackets for our customers' short term requirements.

FIRE EXTINGUISHER / EXTINGUISHING FIXED SYSTEMS SERVICING / INSPECTION

- NOAH is ABS, Lloyds, DNV as well as SCDF (Singapore Fire Safety Bureau) approved to carry out the servicing, hydrotesting and refilling of fire extinguishers for the marine as well as industrial applications.
- Annual inspection / servicing of all fixed systems including CO2 Systems, Halon Systems, Foam Systems, FM 200 systems, Galley Hood Systems among others.
- All services are carried out within our well equipped workshop and not outsourced to 3rd parties so as to ensure the highest standard of quality control.

NOAH

For more information or order,
please contact our Sales Team at
Tel: **(65) 6266-0788** or E-mail: **sales@noah.com.sg**

GAS DETECTOR SERVICING

- Our manufacturer trained technicians are able to carry out a quick service and calibration of gas detectors to ensure minimal downtime.
- Highly trained technicians with full support from manufacturers in terms equipment and software, parts and support to ensure that your detectors are in optimum working condition all the time, every time.
- Contracted with Exxon Mobil, for the supply and servicing of gas detectors.
- Appointed warranty centre for our range of gas detectors.

OTHER VALUE ADDED SERVICES OFFERED

- Rental – Noah is able to provide rental gas detectors for our customers' short term requirements.
- On Board Servicing / Calibration – We are able to accommodate and organize for an 'on board' servicing / calibration of the detectors when the situation does not allow for landing of the same to our workshop for servicing / calibration.

SELF CONTAINED BREATHING APPARATUS (SCBA) SERVICING

- Approved and authorized by ABS, Lloyds and DNV for the servicing of various Breathing Apparatus.
- Manufacturer trained and highly skilled technicians.
- All services are carried out within our well equipped workshop and not outsourced to 3rd parties so as to ensure the highest standard of quality control.
- Highly trained inspectors and necessary equipment to ensure the quickest possible turnaround time for urgent requirements.

OTHER VALUE ADDED SERVICES OFFERED

- Rental – we are also able to support all requirements for rental breathing apparatus.

NOAH

For more information or order,
please contact our Sales Team at
Tel: **(65) 6266-0788** or E-mail: **sales@noah.com.sg**

IMMERSION SUIT SERVICING / PRESSURE TESTING

- Approved, trained and authorized by various manufacturers..
- With our fully equipped workshop and highly trained staff, we are able to turnaround one ship set of suits in 4 to 6 hours at our station, inclusive of carrying out complete pressure testing.
- Able to carry out necessary repairs to the suits as the need arises.

OTHER VALUE ADDED SERVICES OFFERED

- Free Warehousing - at our premises and diligent tracking of customers' immersion suits, which are used for rotation / exchange between their vessels.
- Rental – we are also able to support all requirements for rental immersion suits.

INFLATABLE BOAT SERVICING

• Our fully equipped workshop is able to accommodate any type / size of inflatable boat.

• Services include annual survey as well as minor / major repairs as required.

• Highly trained inspectors and necessary equipment to ensure the quickest possible turnaround time for urgent requirements.

OTHER VALUE ADDED SERVICES OFFERED

• On Board Survey / Repairs – We are able to accommodate and organize for an 'on board' servicing of the boats when situation does not allow for the boat to be landed to our workshop for repairs / inspection.

NOAH

For more information or order,
please contact our Sales Team at
Tel: **(65) 6266-0788** or E-mail: **sales@noah.com.sg**

CHEMICAL SUIT INSPECTION / PRESSURE TESTING / LEAK TESTING

- With our fully equipped workshop and highly trained staff, we are able to carry out pressure testing / leak testing of level 'A' chemical suits to ensure the highest level of protection from your suits.

OTHER SERVICES

RENTAL

Confined Space Equipment, ranging from Airlines, Breathing Apparatus, Ventilation Systems, Gas Detectors, Fall Arrest Systems etc.

TRAINING

1) Fit Testing and Training on the use of Breathing Apparatus and Respiratory Equipment

2) Confined Space Entry and Rescue training

3) Spill Kit Training

NOAH

For more information or order,
please contact our Sales Team at
Tel: **(65) 6266-0788** or E-mail: **sales@noah.com.sg**

MANUFACTURERS CERTIFICATIONS

MANUFACTURERS CERTIFICATIONS

WE REPRESENT:

Respiratory Protection

SPERIAN Respiratory Protection France
FENZY
Erie MEDICAL a division of Ocenco, Inc.
3M

Inflatable Lifejackets

Crewsaver
SECUMAR

Fall Protection

SÖII Fall Protection Systems
MILLER

Lights

imax
Sealite www.sealite.com.au

Magnetic Compass

Lilley & Gillie England
DAIKO

Davits & Cranes

davit international Decksausrüstung deck equipment

Inflatable Life Rafts, Boats & OBM (Sale & Service)

FUJIKURA COMPOSITES
MITSUBISHI
SUMITOMO ELECTRIC
HN 海宁 HAI NING
CRI
NARWHAL INFLATABLE CRAFT

Nautical Instruments

Hanseatic Instruments Hamburg
VANGUARD

Gas Detection

SPERIAN Protection you can trust
biosystems

Horns & Whistles

IBUKI KOGYO CO., LTD.

LSA & Accessories

THE SCIENCE ACR OF SURVIVAL
COSALT
DATREX
Electric Fuel
IMPERIAL IMMERSION SUITS by REVERE
EVAL
LALIZAS
REVERE
Safegard
HAMMAR BETTER SOLUTIONS FOR SAFETY AT SEA
Hansson PyroTech
宁波振华公司 Ningbo Zhenhua Co.,ltd

Wipers/Clear View Screen

HEPWORTH PANTOGRAPH
Wynn MARINE WINDOW WIPING SYSTEMS

Seats

CLEEMANN CHAIR SYSTEMS

Fire Detection System

ITIM SYSTEMS PTY LTD

Fire Equipment

JOCKEL
GLORIA
TEMPEX

Torchlights & Handlamps

BRIGHT STAR

Personal Protective Equipment

SPERIAN
Bilsom
PULSAFE
HOWARD LEIGHT
COMASEC
WILLSON
uvex
Lakeland INDUSTRIES, INC

Emergency Eye Wash

Haws corporation
WESTERN EMERGENCY EQUIPMENT

Ventilation

COPPUS Portable Ventilators

NOAH

Safety - no way but NOAH's way

Sales/Admin
20, Tuas Avenue 4
Singapore 639370

Service/Operations
20, Tuas Avenue 3
Singapore 639416

Tel : (65) 62660788
Fax : (65) 62661042
Email : sales@noah.com.sg